SECTION 100 - STANDARD PLANS

The City of Irvine Standard Plans are intended to provide for uniform design in the City of Irvine. They should be used in conjunction with the City of Irvine Design Manual, Irvine Municipal Code and the current adopted Standard Specifications for Public Works Construction.

The enclosed Standard Plans have been comprehensively updated and supersede all previous Standard Plans. In some cases Standard Plans previously used have been modified or deleted. In other instances new Standard Plans have been added.

TABLE OF CONTENTS

SECTION 100

CITY OF IRVINE STANDARD PLANS

100-SERIES

STREET DESIGN

STANDARD PLAN NUMBER	DESCRIPTION
100	Topographic Symbols
101	Major Arterial Highway
102	Primary Arterial Highway
103	Secondary Arterial Highway
103A	Commuter Arterial Highway
104	Local Streets
104A	Local Collector
105	Standard Cul-De-Sac
105A	Modified Symmetrical Cul-De-Sac
105B	Offset Cul-De-Sac
106	Standard Knuckle
106A	Local Street Bend
107	Parabolic Curb Transition
108	Parabolic Median Curb Flare
109	(BLANK)
110	Raised Median Nose Location
110A	Median Signage
111	Private Way
112	Private Court
113	Chokers-Local Streets
113A	Chokers-Private Ways
114	Emergency Vehicle Median Turn-Around

200-SERIES

CURB & GUTTER, SIDEWALK, DRIVEWAYS

STANDARD PLAN NUMBER	DESCRIPTION
200	Concrete Curbs and Gutters
200A	Court/Way Curb and Gutter
200B	Depressed Curb
201	Sidewalk Detail
201A	Sidewalk Detail with Driveway
202	Curb Return Details
203	Crosswalk Detail
204	Driveway Type I (Flared)
205	Driveway Type II
206	Driveway Type III (Flared)
207	(BLANK)
208	(BLANK)
209	Bus Stop Turnout
210	(BLANK)
211	Bridge Sidewalk/Approach Slab
212	(BLANK)
213	(BLANK)
214	Survey Monument
214A	Survey Monument (Raised Medians)
215	Street Lights (Parkway)
216	Street Name Signs – Location
216A	Street Name Signs Detail
217	Temporary Access Ramp
218	Parkway Obstructions
219	Sign Post Block-Out
220	Meter & Vault Cover Detail
221	(BLANK)
222	Moisture Barrier Detail
223	Utility Trench Repair

300-SERIES

STORM DRAINAGE

STANDARD PLAN NUMBER	DESCRIPTION
300	Catch Basin Type I
301	Catch Basin Type II
302	Catch Basin Details (For Type A-2 Curb & Gutter)
302A	Catch Basin Details (For Type D Curb & Gutter)
303	Local Depression
304	C.S.P. Drop Inlet
305	Under Sidewalk Drain (New Construction)
305A	Under Sidewalk Drain (Existing Construction)
306	Junction Structure No. I
306A	Junction Structure No. I
307	Junction Structure No. II
307A	Junction Structure No. II
308	Junction Structure No. III
308A	Junction Structure No. III
309	Junction Structure No. IV
309A	Junction Structure No. IV
309B	Junction Structure No. V
310	Concrete Collar
311	Manhole Frame & Cover
312	36” Reinforced Concrete Manhole
313	48” Reinforced Concrete Manhole
314	24” Reinforced Concrete Grade Rings
315	(BLANK)
316	(BLANK)
317	(BLANK)
318	Storm Drain Bedding Detail
319	Desilting Basin
320	Subdrain Details

400-SERIES

SIGNING & STRIPING, SIGHT DISTANCE, AND PARKING

STANDARD PLAN NUMBER	DESCRIPTION
400	Dead End Signing
401	Metal Beam Guard Railing
402	Guide Marker Placement
403	Sight Distance Detail
404	(BLANK)
405	Concrete Class Use Table
406	(BLANK)
407	(BLANK)
408	(BLANK)
409	(BLANK)
410	Off-Street Bike Trail Intersection
411	Off-Street Parking

800-SERIES

MISCELLANEOUS

STANDARD PLAN NUMBER	DESCRIPTION
840	Electric Meter Pedestal

CITY OF IRVINE
PUBLIC WORKS

TOPOGRAPHIC SYMBOLS

	TELEPHONE POLE		MAIL BOX
	EDISON POLE		STREET SIGN
	GUY WIRE		STREET LIGHT
S	SEWER MANHOLE		TRAFFIC SIGNAL
D	STORM DRAIN MANHOLE		PEDESTRIAN SIGNAL
	FIRE HYDRANT		TRAFFIC SIGNAL CONTROLLER
	SPRINKLER HEAD		PULL BOX
	HOSE BIB		FIRE ALARM BOX
	IRRIGATION STANDPIPE	R/R	RAILROAD CROSSING SIGNAL
	WATER WELL		TREE
	WATER VALVE		PALM TREE
	GAS VALVE		SHRUB
	WATER METER		BARRICADE
	GAS METER		CONCRETE BLOCK WALL
W	WATER VAULT		WOOD FENCE
G	GAS VAULT		CHAIN LINK FENCE
T	TELEPHONE VAULT		EDGE OF EXISTING A.C. PAVEMENT
E	EDISON VAULT		EXISTING CONCRETE SURFACE

LINE SYMBOLS

RIGHT-OF-WAY	
PROPOSED IMPROVEMENTS	
EXISTING IMPROVEMENTS	
FUTURE IMPROVEMENTS	
STORM DRAIN	SD
SANITARY SEWER	S
WATER	W
RECLAIMED WATER	RW
GAS	G
TELEPHONE	T
ELECTRIC	E
SIGNAL INTERCONNECT	SIC

TOPOGRAPHIC SYMBOLS

MARK CARROLL, R.C.E. 31515
CITY OF IRVINE - CITY ENGINEER

AUGUST 2013
DATE

STD. PLAN 100

SHEET 1 OF 1

CITY OF IRVINE
PUBLIC WORKS

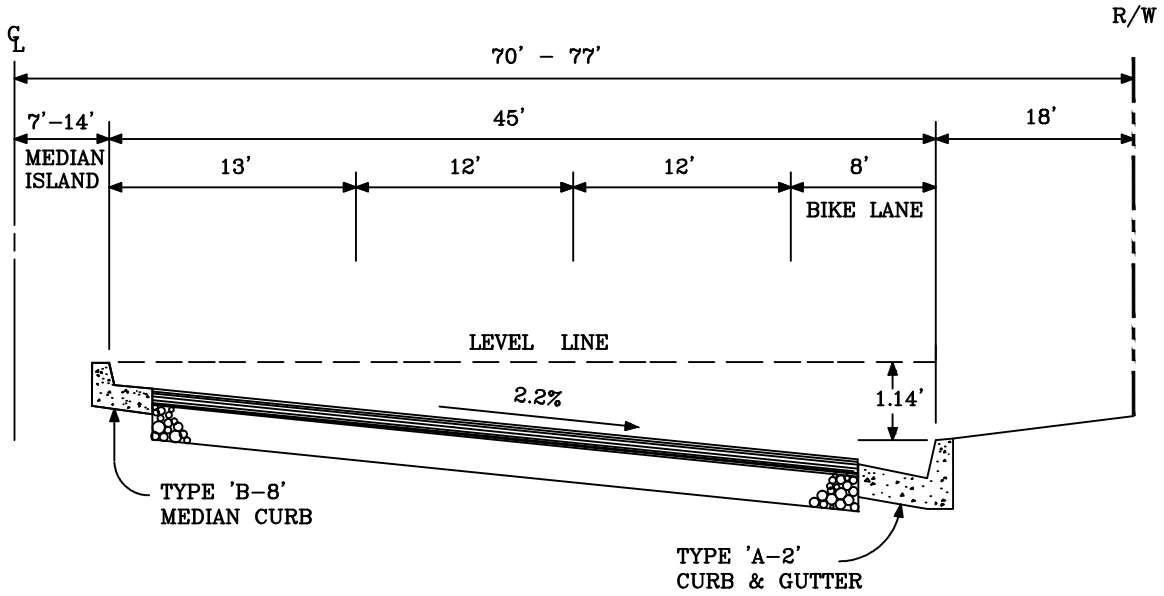

DESIGN SPEED: 60 MPH
CENTERLINE CURVE RADIUS: 2470 FEET MINIMUM (SOURCE CALTRANS DESIGN MANUAL)
ADT VOLUME: 33,900 TO 50,600

NOTES :

1. SEE STANDARD PLAN NO. 200 FOR CURB AND GUTTER DETAILS.
2. STRUCTURAL SECTION TO BE DETERMINED BY SOILS TESTS AND APPROVED BY THE CITY ENGINEER.
3. EXACT WIDTH OF ROADWAY AND PARKWAY TO BE DETERMINED BY THE CITY ENGINEER. IF REQUIRED BY AN APPROVED TRAFFIC STUDY ADDITIONAL LANE(S) SHALL BE ADDED.
4. LANDSCAPING OF MEDIAN AND PARKWAY AS REQUIRED BY THE CITY ENGINEER.
5. SIDEWALK IN PARKWAY AS REQUIRED BY THE CITY ENGINEER.
6. FINISHED SURFACE OF PAVEMENT SHALL BE 3/8 INCH ABOVE LIP OF PARKWAY GUTTER & FLUSH WITH LIP OF MEDIAN GUTTER.
7. MOISTURE BARRIERS SHALL BE REQUIRED AS SHOWN ON STANDARD PLAN NO. 222 UNLESS OTHERWISE APPROVED BY THE CITY ENGINEER.
8. LEFT TURN LANES SHALL HAVE A MINIMUM WIDTH OF 10 FEET PER LANE.
9. SEE STANDARD PLAN NO. 201 AND 201A FOR SIDEWALK REQUIREMENT AND DETAILS.
10. NO ON–STREET PARKING ALLOWED ON ARTERIAL STREETS.
11. TYPE "A–2" CURB/GUTTER SHALL BE USED AT THE MEDIAN (SEE STD. PLAN 200 IF STREET STORMWATER RUNOFF IS DIRECTED TO MEDIAN.

MAJOR ARTERIAL HIGHWAY

MARK CARROLL, R.C.E. 31515
CITY OF IRVINE - CITY ENGINEER

AUGUST 2013
DATE

STD. PLAN 101

SHEET 1 OF 1

CITY OF IRVINE
PUBLIC WORKS

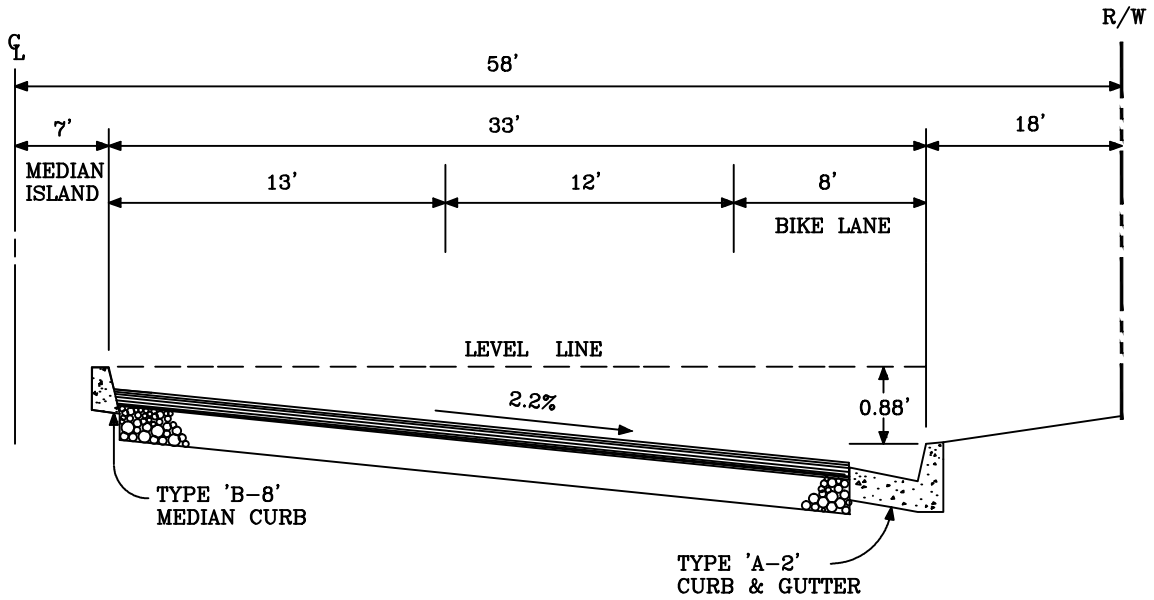

DESIGN SPEED: 55 MPH
CENTERLINE CURVE RADIUS: 1880 FEET MINIMUM (SOURCE CALTRANS DESIGN MANUAL)
ADT VOLUME: 22,500 TO 33,600

NOTES:

1. SEE STANDARD PLAN NO. 200 FOR CURB AND GUTTER DETAILS.
2. STRUCTURAL SECTION TO BE DETERMINED BY SOILS TESTS AND APPROVED BY THE CITY ENGINEER.
3. EXACT WIDTH OR ROADWAY AND PARKWAY TO BE DETERMINED BY THE CITY ENGINEER. IF REQUIRED BY AN APPROVED TRAFFIC STUDY ADDITIONAL LANE(S) SHALL BE ADDED.
4. LANDSCAPING OF MEDIAN AND PARKWAY AS REQUIRED BY THE CITY ENGINEER.
5. SIDEWALK IN PARKWAY AS REQUIRED BY THE CITY ENGINEER.
6. FINISHED SURFACE OF PAVEMENT SHALL BE 3/8 INCH ABOVE LIP OF PARKWAY GUTTER & FLUSH WITH LIP OF MEDIAN GUTTER.
7. MOISTURE BARRIERS SHALL BE REQUIRED AS SHOWN ON STANDARD PLAN NO. 222 UNLESS OTHERWISE APPROVED BY THE CITY ENGINEER.
8. LEFT TURN LANES SHALL HAVE A MINIMUM WIDTH OF 10 FEET PER LANE,
9. SEE STANDARD PLAN NO. 201 AND 201A FOR SIDEWALK REQUIREMENTS AND DETAILS.
10. NO ON-STREET PARKING ALLOWED ON ARTERIAL STREETS.
11. TYPE "A-2" CURB/GUTTER SHALL BE USED AT THE MEDIAN (SEE STD. PLAN 200) IF STREET STORMWATER RUNOFF IS DIRECTED TO MEDIAN.

PRIMARY ARTERIAL HIGHWAY

MARK CARROLL, R.C.E. 31515
CITY OF IRVINE - CITY ENGINEER

AUGUST 2013
DATE

STD. PLAN 102

SHEET 1 OF 1

CITY OF IRVINE
PUBLIC WORKS

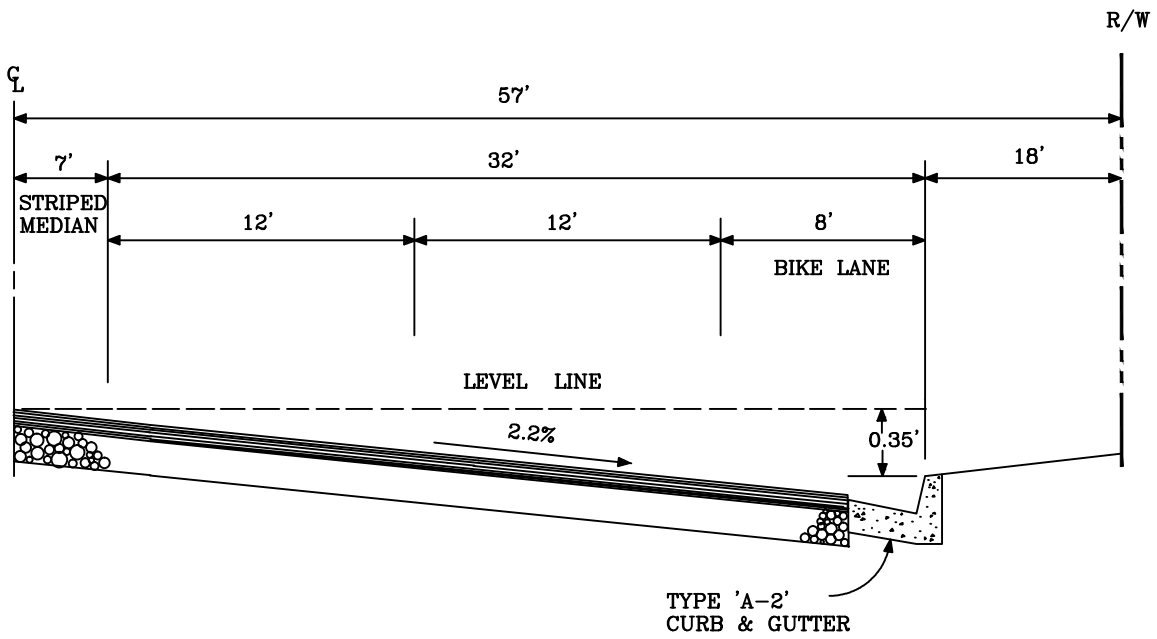

DESIGN SPEED: 50 MPH
CENTERLINE CURVE RADIUS: 1420 FEET MINIMUM (SOURCE CALTRANS DESIGN MANUAL)
ADT VOLUME: 15,000 TO 22,500

NOTES:

1. SEE STANDARD PLAN NO. 200 FOR CURB AND GUTTER DETAILS.
2. SEE STRUCTURAL SECTION TO BE DETERMINED BY SOILS TESTS AND APPROVED BY THE CITY ENGINEER.
3. EXACT WIDTH OF ROADWAY AND PARKWAY TO BE DETERMINED BY THE CITY ENGINEER. IF REQUIRED BY AN APPROVED TRAFFIC STUDY ADDITIONAL LANE(S) SHALL BE ADDED.
4. LANDSCAPING AND SIDEWALK IN PARKWAY AS REQUIRED BY THE CITY ENGINEER.
5. FINISHED SURFACE OF PAVEMENT SHALL BE 3/8 INCH ABOVE LIP OF GUTTER.
6. LEFT TURN LANES SHALL HAVE A MINIMUM WIDTH OF 10 FEET PER LANE.
7. SEE STANDARD PLAN NO. 201 AND 201A FOR SIDEWALK REQUIREMENTS AND DETAILS.
8. NO ON-STREET PARKING ALLOWED ON ARTERIAL STREETS.
9. TYPE "B-8" CURB SHALL BE USED IF RAISED MEDIAN IS PROPOSED ON SECONDARY ARTERIAL HIGHWAYS.

SECONDARY ARTERIAL HIGHWAY

MARK CARROLL, R.C.E. 31515
CITY OF IRVINE - CITY ENGINEER

AUGUST 2013
DATE

STD. PLAN 103

SHEET 1 OF 1

CITY OF IRVINE
PUBLIC WORKS

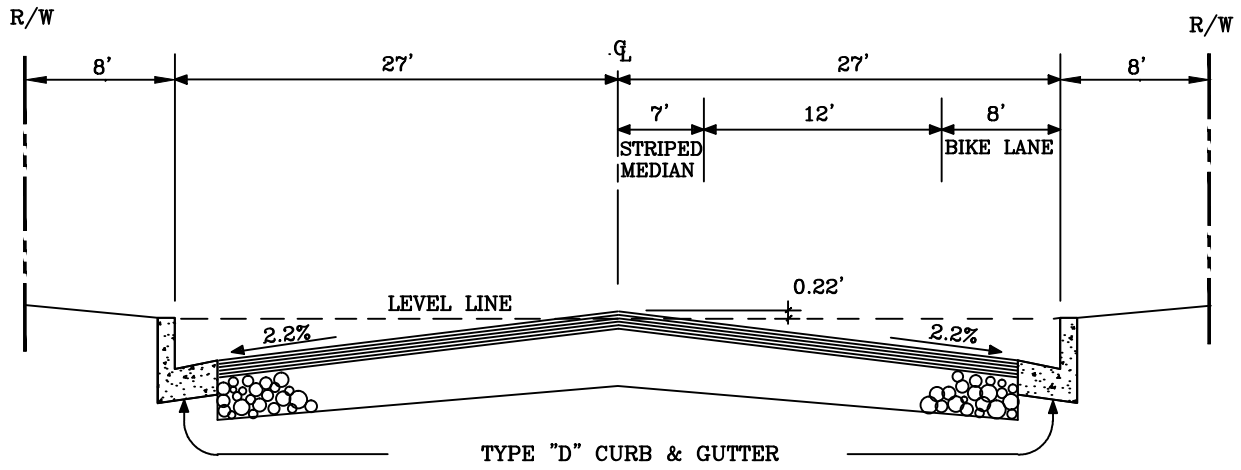

DESIGN SPEED: 45 MPH
CENTERLINE CURVE RADIUS: 1,150 FEET MINIMUM (SOURCE CALTRANS DESIGN MANUAL)
ADT VOLUME: 7,500 TO 11,300

NOTES:

1. SEE STANDARD NO. 200 FOR CURB AND GUTTER DETAIL.
2. SEE STANDARD NO. 201 AND 201A FOR SIDEWALK REQUIREMENTS AND DETAILS.
3. STRUCTURAL SECTION TO BE DETERMINED BY SOIL TEST AND APPROVED BY THE CITY ENGINEER.
4. EXACT WIDTH OF ROADWAY AND PARKWAY TO BE DETERMINED BY THE CITY ENGINEER. IF REQUIRED BY AN APPROVED TRAFFIC STUDY ADDITIONAL LANE(S) SHALL BE ADDED.
5. LANDSCAPING AND SIDEWALK IN PARKWAY AS REQUIRED BY THE CITY ENGINEER.
6. FINISHED SURFACE OF PAVEMENT SHALL BE 3/8 INCH ABOVE LIP OF GUTTER.
7. LEFT TURN LANES SHALL HAVE A MINIMUM WIDTH OF 10 FEET PER LANE.
8. NO ON-STREET PARKING ALLOWED ON ARTERIAL STREETS.
9. TYPE "B-8" CURB SHALL BE USED IF RAISED MEDIAN IS PROPOSED ON COMMUTER ARTERIAL HIGHWAY.

COMMUTER ARTERIAL HIGHWAY

MARK CARROLL, R.C.E. 31515
CITY OF IRVINE - CITY ENGINEER

AUGUST 2013
DATE

STD. PLAN 103A

SHEET 1 OF 1

CITY OF IRVINE
PUBLIC WORKS

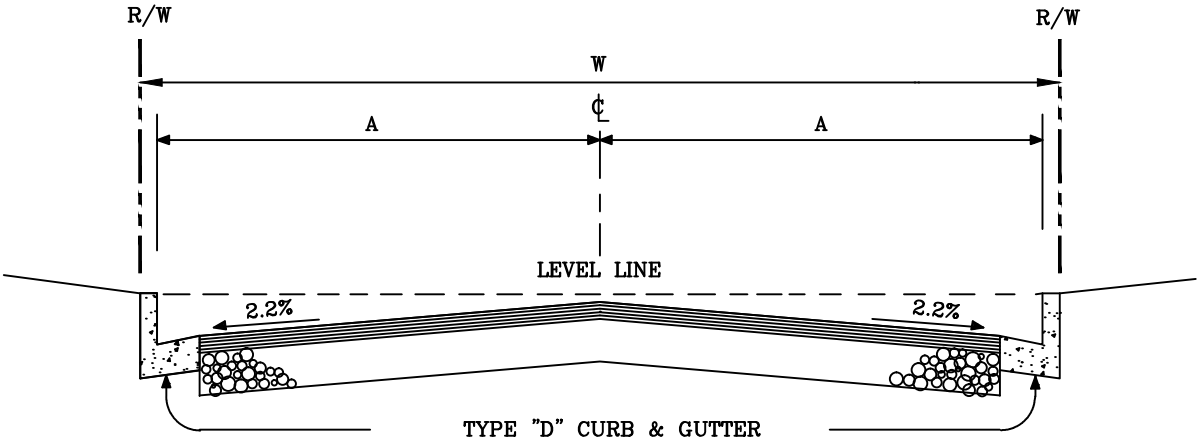

DESIGN SPEED: 25 MPH
CENTERLINE CURVE RADIUS: 300 FEET MINIMUM (SOURCE CALTRANS DESIGN MANUAL)
ADT VOLUME: 200–1200

TYPE	ACCESS ALLOWED	PARKING	A	DISTANCE FROM LEVEL LINE TO FINISHED SURFACE AT ℄
INDUSTRIAL/COMMERCIAL	BOTH SIDES	BOTH SIDES	22'	.10'
INDUSTRIAL/COMMERCIAL	BOTH SIDES	NOT ALLOWED	20'	.06'
MIXED–USE	BOTH SIDES	BOTH SIDES	20'	.06'
RESIDENTIAL	ONE SIDE	ONE SIDE	12'&18'	–.12'&.02'
RESIDENTIAL	BOTH SIDES	BOTH SIDES	18'	.02'
RESIDENTIAL	BOTH SIDES	ONE SIDE	14'&18'	–.07'&.02'
RESIDENTIAL	BOTH SIDES	NONE	14'	–.07'

* MIXED–USE IS DEFINED AS BOTH INDUSTRIAL OR COMMERCIAL WITH RESIDENTIAL.

NOTES:

1. "W" IS MEASURED FROM BACK OF CURB TO BACK OF CURB. (PUBLIC STREETS SHALL INCLUDE PARKWAY WIDTH REQUIREMENTS)
2. SEE STANDARD PLAN NO. 200 FOR CURB AND GUTTER DETAIL.
3. SEE STANDARD PLAN NO. 201 AND 201A FOR SIDEWALK REQUIREMENTS AND DETAIL.
4. STRUCTURAL SECTION TO BE DETERMINED BY SOILS TEST AND APPROVED BY THE CITY ENGINEER. MINIMUM SECTION SHALL BE 0.25 FEET A.C. OVER 0.50 FEET A.B. FOR STREETS USING ONE LIFT OF 1/2 INCH DIAMETER AGGREGATE AND PG 64–10 A.C., OR 0.35 FEET A.C. OVER 0.5 FEET A.B. FOR STREETS USING BASE COURSE OF 0.25 FEET A.C. WITH A FINISH COURSE OF 0.1 FEET A.C. THE FINAL LIFT SHALL CONSIST OF 1/2 INCH DIAMETER AGGREGATE AND PG 64–10 A.C. ALL LIFTS EXCEPT THE FINAL LIFT SHALL CONSIST 3/4 INCH DIAMETER AGGREGATE PG 64–10 A.C.
5. FOR STREETS 1000 FEET OR MORE, SEE STANDARD PLAN 104A.
6. UTILITY AND SIDEWALK EASEMENTS WILL BE REQUIRED ON EACH SIDE OF STREET UNLESS OTHERWISED APPROVED BY THE CITY ENGINEER.
7. TRANSITIONS IN "A" WILL BE REQUIRED TO HAVE 25 FOOT REVERSE CURVES OR 40:1 TAPERS.
8. FINISHED SURFACE OF PAVEMENT SHALL BE 3/8 INCH ABOVE LIP OF PARKWAY GUTTER.
9. EACH PARALLEL PARKING SPACE SHALL HAVE A MINIMUM DIMENSION OF 8 FEET WIDE BY 22 FEET LONG AND SHALL BE IN ACCORDANCE WITH ZONING ORDINANCE SECTION 4–4–1 A.5.
10. TYPE "B–6" CURB SHALL BE USED IF RAISED MEDIAN IS PROPOSED ON LOCAL STREETS.

LOCAL STREETS

MARK CARROLL, R.C.E. 31515
CITY OF IRVINE - CITY ENGINEER

AUGUST 2013
DATE

STD. PLAN 104

SHEET 1 OF 1

CITY OF IRVINE
PUBLIC WORKS

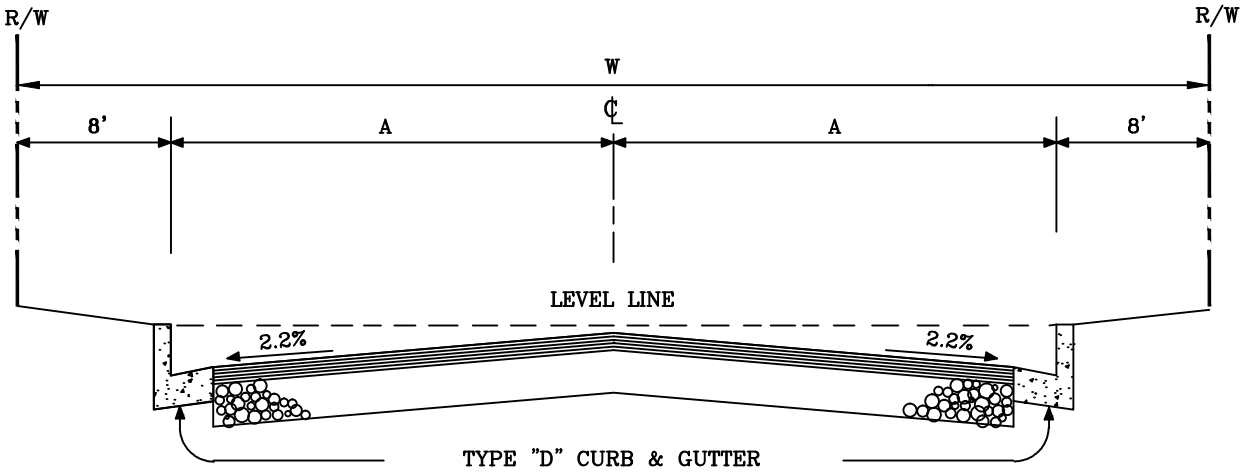

DESIGN SPEED: 35 MPH
CENTERLINE CURVE RADIUS: 620 FEET MINIMUM (SOURCE CALTRANS DESIGN MANUAL)
ADT VOLUME: 1,200 TO 6,000

TYPE	ACCESS ALLOWED	PARKING	A	DISTANCE FROM LEVEL LINE TO FINISHED SURFACE AT ℄
INDUSTRIAL/COMMERCIAL	BOTH SIDES	BOTH SIDES	24'	.15'
INDUSTRIAL/COMMERCIAL	BOTH SIDES	NOT ALLOWED	22'	.10'
MIXED-USE	BOTH SIDES	BOTH SIDES	22'	.10
RESIDENTIAL	ONE SIDE	ONE SIDE	14'&20'	-.07'&.06'
RESIDENTIAL	BOTH SIDES	BOTH SIDES	20'	.06
RESIDENTIAL	BOTH SIDES	ONE SIDE	16'&20'	-.03'&.06'
RESIDENTIAL	BOTH SIDES	NONE	16'	-.03'

LOCAL STREETS THAT EXCEED 1000' IN LENGTH SHALL BE CONSIDERED A LOCAL COLLECTOR.
*MIXED-USE IS DEFINED AS BOTH INDUSTRIAL OR COMMERCIAL WITH RESIDENTIAL.

NOTES:
1. "W" IS MEASURED FROM RIGHT-OF-WAY TO RIGHT-OF-WAY.
2. SEE STANDARD PLAN NO. 200 FOR CURB AND GUTTER DETAIL.
3. SEE STANDARD PLAN NO. 201 AND 201A FOR SIDEWALK REQUIREMENTS AND DETAIL.
4. STRUCTURAL SECTION TO BE DETERMINED BY SOILS TEST AND APPROVED BY THE CITY ENGINEER. MINIMUM SECTION SHALL BE 0.25 FEET A.C. OVER 0.50 FEET A.B. FOR STREETS USING ONE LIFT OF 1/2 INCH DIAMETER AGGREGATE AND PG 64-10 A.C., OR 0.35 FEET A.C. OVER 0.5 FEET A.B. FOR STREETS USING BASE COURSE OF 0.25 FEET A.C. WITH A FINISH COURSE OF 0.1 FEET A.C. THE FINAL LIFT SHALL CONSIST OF 1/2 INCH DIAMETER AGGREGATE AND PG 64-10 A.C. ALL LIFTS EXCEPT THE FINAL LIFT SHALL CONSIST OF 3/4 INCH DIAMETER AGGREGATE PG 64-10 A.C.
5. MINIMUM 8 FEET PARKWAY SHALL BE PROVIDED FOR SIDEWALK AND PUBLIC UTILITY USE.
6. TRANSITIONS IN "A" WILL BE REQUIRED TO HAVE 25 FOOT REVERSE CURVES OR 40:1 TAPERS.
7. FINISHED SURFACE OF PAVEMENT SHALL BE 3/8 INCH ABOVE LIP OF PARKWAY GUTTER.
8. EACH PARALLEL PARKING SPACE SHALL HAVE A MINIMUM DIMENSION OF 8 FEET WIDE BY 22 FEET LONG. AND SHALL BE IN ACCORDANCE WITH ZONING ORDINANCE SECTION 4-4-1 A.5.
9. TYPE "B-6" CURB SHALL BE USED IF RAISED MEDIAN IS PROPOSED ON LOCAL COLLECTOR.

LOCAL COLLECTOR

MARK CARROLL, R.C.E. 31515
CITY OF IRVINE - CITY ENGINEER

AUGUST 2013
DATE

STD. PLAN 104A

SHEET 1 OF 1

CITY OF IRVINE

PUBLIC WORKS

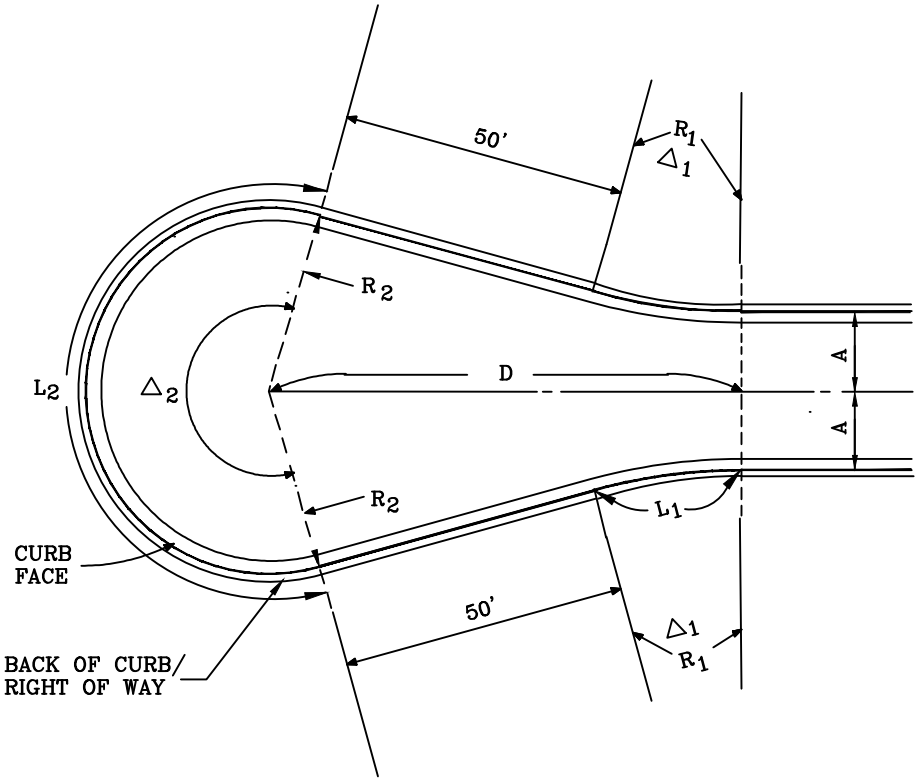

A	Δ_1	R_1	L_1	T_1	Δ_2	R_2	L_2	D
14'	19°07'34"	100'	33.38'	16.85'	218°15'08"	38'	144.75'	92.46'
18'	16°34'35"	100'	28.93'	14.57'	213°09'10"	38'	141.37'	87.29'
20'	15°14'33"	100'	26.60'	13.38'	210°29'07"	38'	139.60'	84.52'

NOTES:
1. "A" IS MEASURED FROM CURB FACE TO CENTERLINE.

STANDARD CUL-DE-SAC

MARK CARROLL, R.C.E. 31515
CITY OF IRVINE - CITY ENGINEER

AUGUST 2013
DATE

STD. PLAN 105

SHEET 1 OF 1

CITY OF IRVINE

PUBLIC WORKS

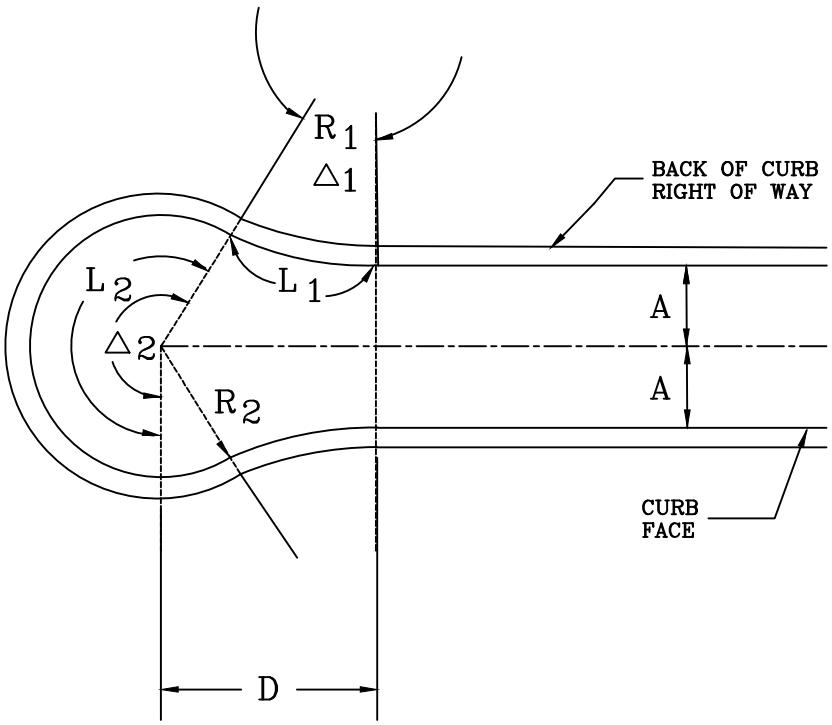

A	△1	R1	L1	T1	△2	R2	L2	D
18'	16°57'27"	100'	54.51'	27.95'	242°27'52"	38'	160.81'	71.55'
20'	27°51'51"	100'	51.65'	26.41'	239°11'01"	38'	158.63'	68.15'
22'	29°35'31"	100'	48.63'	24.81'	235°43'42"	38'	156.34'	64.50'
32'	31°13'56"	100'	29.60'	14.91'	213°54'53"	38'	141.87'	40.25'

NOTES:
1. "A" IS MEASURED FROM CURB FACE TO CENTERLINE.
2. WHEN THERE ARE MORE THAN SIX ACCESSES AROUND THE CUL-DE-SAC, USE STD. PLAN NO. 105.

MODIFIED SYMMETRICAL CUL-DE-SAC

MARK CARROLL, R.C.E. 31515
CITY OF IRVINE - CITY ENGINEER

AUGUST 2013
DATE

STD. PLAN 105A

SHEET 1 OF 1

CITY OF IRVINE

PUBLIC WORKS

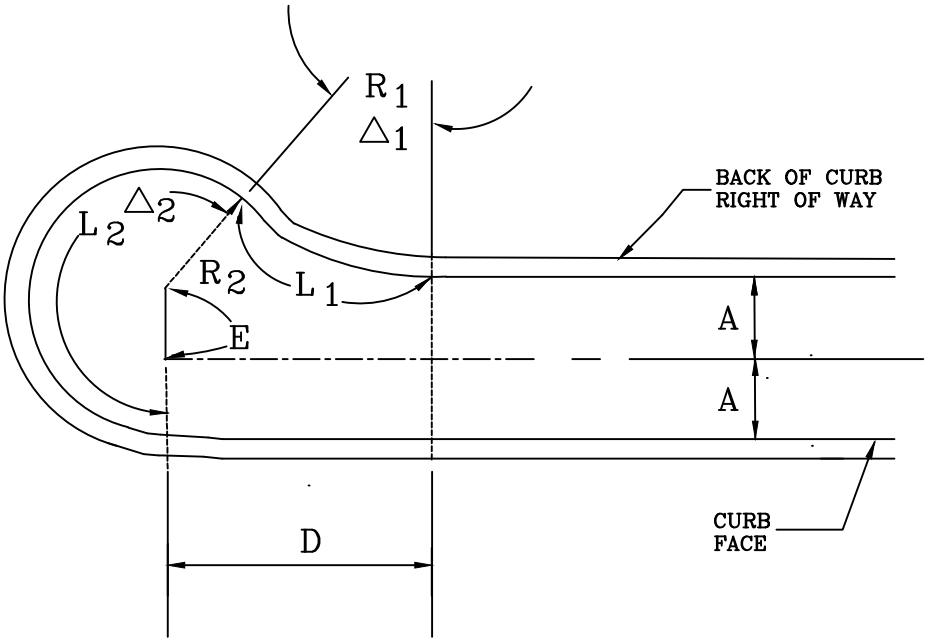

A	△1	R1	L1	T1	△2	R2	L2	D	E
18'	50°58'38"	70'	62.28'	33.37'	230°58'38"	38'	153.19'	83.90'	20'
20'	48°11'23"	70'	58.87'	31.30'	228°11'23"	38'	151.34'	80.50'	18'
22'	45°16'31"	70'	55.31'	29.19'	225°16'31"	38'	149.41'	76.73'	16'
32'	27°15'58"	70'	33.31'	16.98'	207°15'58"	38'	137.46'	49.42'	6'

NOTES:
1. RADIAL POINT MAY BE OFFSET EITHER RIGHT OR LEFT OF CENTERLINE.
2. "A" IS MEASURED FROM CURB FACE TO CENTERLINE.
3. WHEN THERE ARE MORE THAN SIX ACCESSES AROUND THE CUL-DE-SAC, USE STD. PLAN NO. 105.

OFFSET CUL-DE-SAC

MARK CARROLL, R.C.E. 31515
CITY OF IRVINE - CITY ENGINEER

AUGUST 2013
DATE

STD. PLAN 105B

SHEET 1 OF 1

CITY OF IRVINE
PUBLIC WORKS

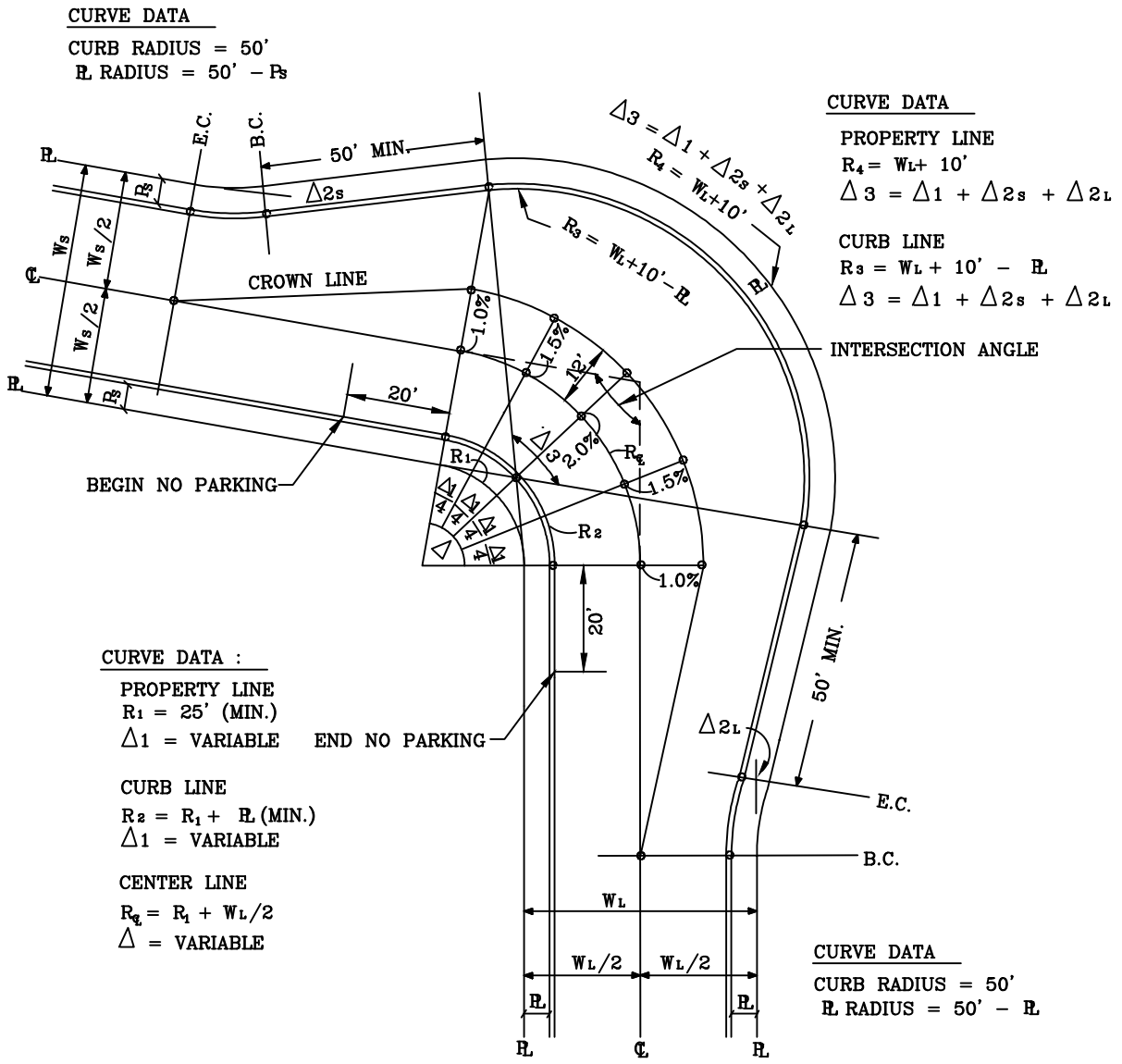

NOTES:
1. KNUCKLES ARE LIMITED TO LOCAL STREETS
2. USE NORMAL SECTION FROM INNER CURB TO CENTER LINE.
3. FROM CROWN LINE TO CURB, THE MAXIMUM SLOPE IS 1" PER FOOT.
4. SUPERELEVATION PERCENTAGES SHOWN ARE A STRAIGHT GRADE FROM CENTER LINE TO CROWN LINE.
5. ELEVATIONS ARE REQUIRED WHERE CIRCLED (○).
6. WHEN STREETS ARE SUPER ELEVATED, THE CROWN LINE WILL NOT NECESSARILY TERMINATE ON CENTER LINE AT ANGLE POINT OF CURB.
7. SUBSCRIPTS "S" AND "L" DENOTE SMALLER AND LARGER STREETS RESPECTIVELY.

STANDARD KNUCKLE

MARK CARROLL, R.C.E. 31515
CITY OF IRVINE - CITY ENGINEER

AUGUST 2013
DATE

STD. PLAN 106

SHEET 1 OF 1

CITY OF IRVINE
PUBLIC WORKS

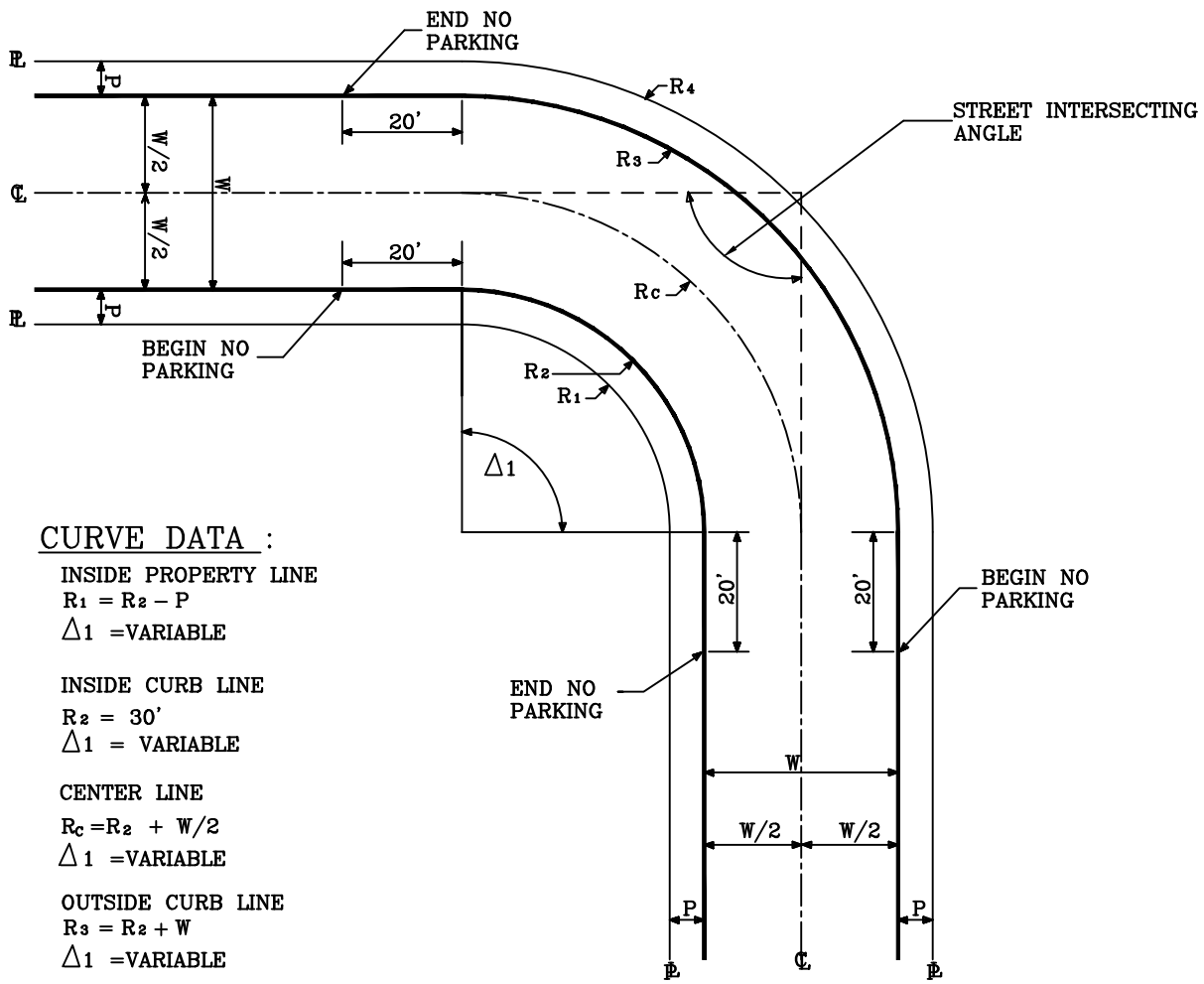

CURVE DATA :

INSIDE PROPERTY LINE
$R_1 = R_2 - P$
$\Delta 1$ =VARIABLE

INSIDE CURB LINE
$R_2 = 30'$
$\Delta 1$ = VARIABLE

CENTER LINE
$R_C = R_2 + W/2$
$\Delta 1$ =VARIABLE

OUTSIDE CURB LINE
$R_3 = R_2 + W$
$\Delta 1$ =VARIABLE

OUTSIDE PROPERTY LINE
$R_4 = R_2 + W + P$
$\Delta 1$ =VARIABLE

NOTES:
1. LOCAL STREET BEND'S ARE LIMITED TO LOCAL STREETS WITH LIMITED ACCESS AT BEND.
2. STREET INTERSECTING ANGLE SHALL BE 90° OR MORE.
3. USE NORMAL SECTION FROM CURB TO CENTERLINE.

LOCAL STREET BEND

MARK CARROLL, R.C.E. 31515
CITY OF IRVINE - CITY ENGINEER

AUGUST 2013
DATE

STD. PLAN 106A

SHEET 1 OF 1

CITY OF IRVINE
PUBLIC WORKS

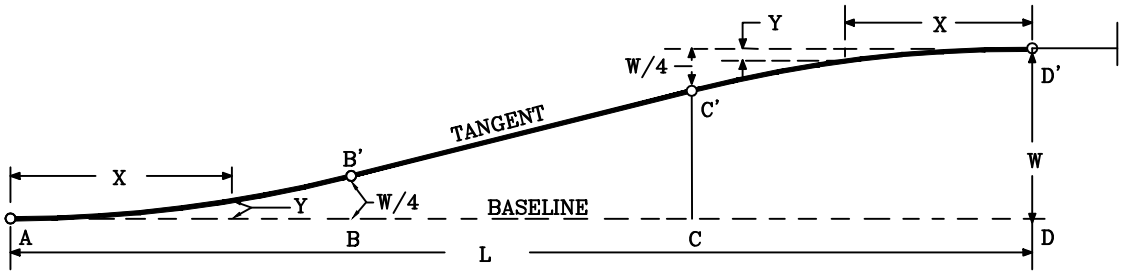

W = WIDTH OF LEFT TURN POCKET
L = LENGTH OF TAPER
X = DISTANCE FROM POINT "A" ALONG BASE LINE
Y = OFFSET FROM BASE LINE
AB = BC = CD = L/3
AB' AND C'D' ARE PARABOLIC CURVES EXCEPT ON CURVED ALIGNMENTS

SINGLE LEFT TURN POCKET

L=90' W=10'

X	0'	10'	20'	30'	40'	50'	60'	70'	80'	90'
Y	0.00'	0.28'	1.11'	2.50'	4.17'	5.83'	7.50'	8.89'	9.72'	10.00'

DOUBLE LEFT TURN POCKET

L=150' W=20'

X	0'	10'	20'	30'	40'	50'	60'	70'
Y	0.00'	0.20'	0.80'	1.80'	3.20'	5.00'	7.00'	9.00'

80'	90'	100'	110'	120'	130'	140'	150'
11.00'	13.00'	15.00'	16.80'	18.20'	19.20'	19.80'	20.00'

NOTE:
1. IN THE CASE WHEN THE BASELINE IS CURVED THE OFFSETS ARE CALCULATED BY ASSUMING THE BASELINE TO BE A TANGENT, THEN THEY ARE APPLIED TO THE CURVED BASELINE. AB' AND C'D' ARE NO LONGER PARABOLIC AND B'C' IS NO LONGER TANGENT.
2. THE MINIMUM WIDTH OF A RAISED MEDIAN IS 4 FOOT WIDE FROM CURB FACE TO CURB FACE.

PARABOLIC CURB TRANSITION

MARK CARROLL, R.C.E. 31515
CITY OF IRVINE - CITY ENGINEER

AUGUST 2013
DATE

STD. PLAN 107

SHEET 1 OF 1

CITY OF IRVINE
PUBLIC WORKS

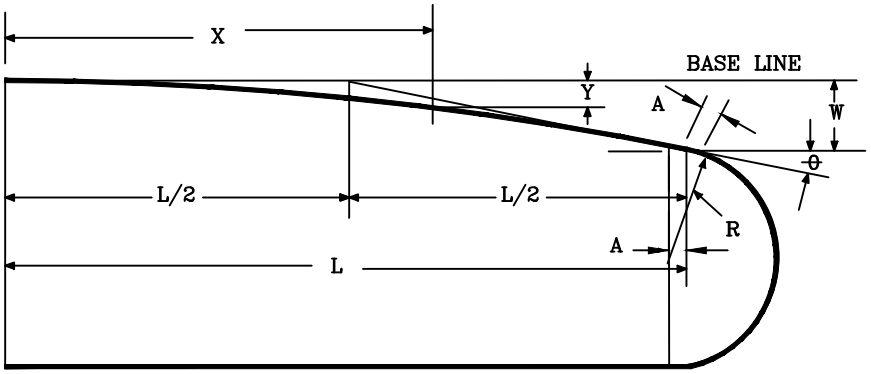

$Y=W(X/L)^2$ $\tan\theta=2W/L$ $A=R(\tan\theta/2)$

L = LENGTH OF FLARE IN FEET
W = MAXIMUM OFFSET DISTANCE IN FEET
X = DISTANCE ALONG BASE LINE IN FEET

A = TANGENT
R = RADIUS OF NOSE IN FEET
Y = OFFSET FROM BASE LINE IN FEET

OFFSET "Y" (IN FEET)
FOR W/L = 1:10

L \ X	10	20	30	40	50	60	70	80	90	100
60	.17	.67	1.50	2.67	4.17	6.00	—	—	—	—
100	.10	.40	.90	1.60	2.50	3.60	4.90	6.40	8.10	10.00

NOTE:
1. FOR 60 FOOT FLARE, USE R = 4 FOOT (14 FOOT MEDIAN)
   FOR 100 FOOT FLARE, USE R = 7 FOOT (24 FOOT MEDIAN).
2. IF STATION OF RADIUS POINT IS NOT GIVEN ON PLAN,
   TANGENT 'A' MAY BE IGNORED.

PARABOLIC MEDIAN CURB FLARE

MARK CARROLL, R.C.E. 31515
CITY OF IRVINE - CITY ENGINEER

AUGUST 2013
DATE

STD. PLAN 108

SHEET 1 OF 1

CITY OF IRVINE
PUBLIC WORKS

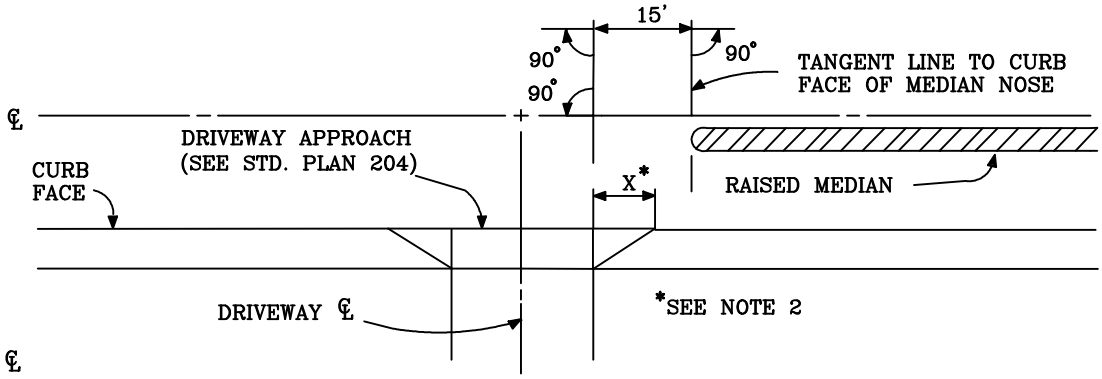

RIGHT ANGLE INTERSECTION (DRIVEWAY)

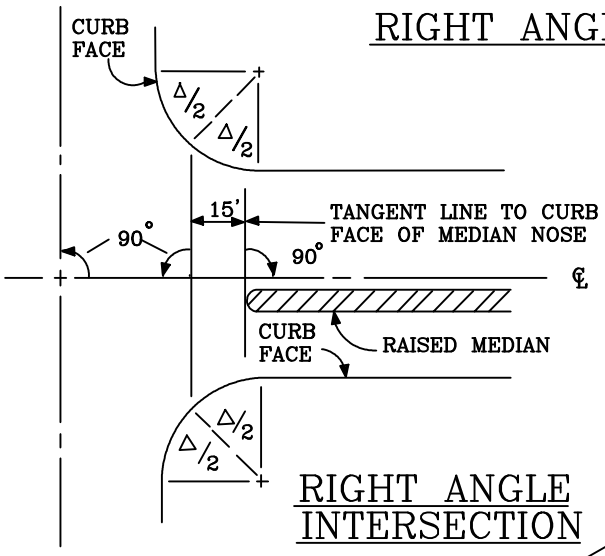

RIGHT ANGLE INTERSECTION

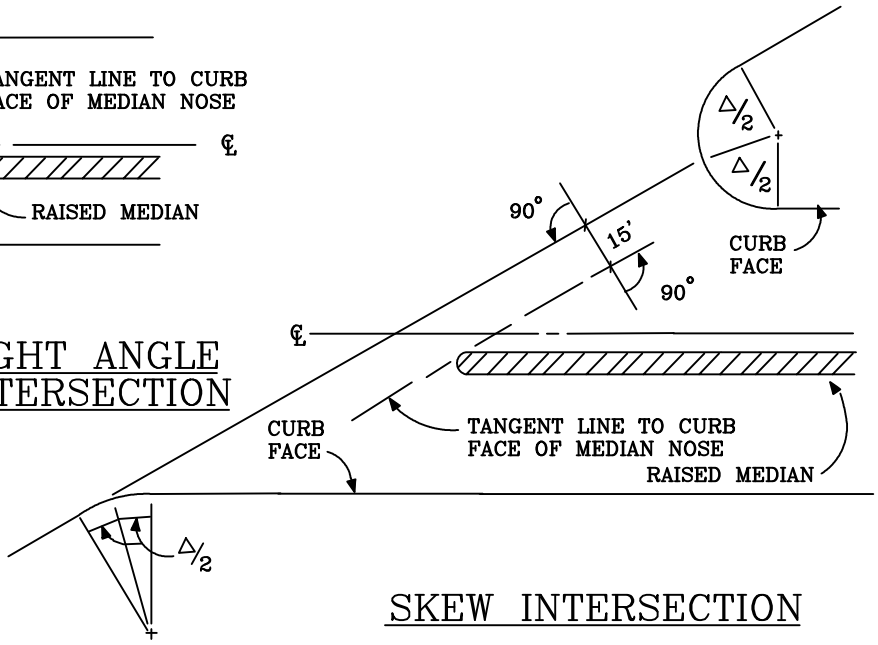

SKEW INTERSECTION

NOTES:

1. EXTEND DOUBLE YELLOW STRIPING FROM MEDIAN NOSE TO CROSSWALK OR TO Δ/2 IF THERE IS NO CROSSWALK.
2. "X" SHALL BE 3 FEET FOR 6 INCH CURB, 4 FEET FOR 8 INCH CURB.
3. FOR CROSSWALK LOCATIONS, SEE STD. PLAN 203.

RAISED MEDIAN NOSE LOCATION

MARK CARROLL, R.C.E. 31515
CITY OF IRVINE - CITY ENGINEER

AUGUST 2013
DATE

STD. PLAN 110

SHEET 1 OF 1

CITY OF IRVINE
PUBLIC WORKS

NOTE:

1. INSTALL MEDIAN NOSE SIGNS, POST, AND 12"X12" BLOCK-OUT PER CITY OF IRVINE STANDARD PLAN No. 219.

2. 4"X4" WOOD POST SHALL BE PAINTED "IRVINE BROWN".

3. ALL SIGNS SHALL BE IN ACCORDANCE WITH THE LATEST EDITION OF THE CA MUTCD.

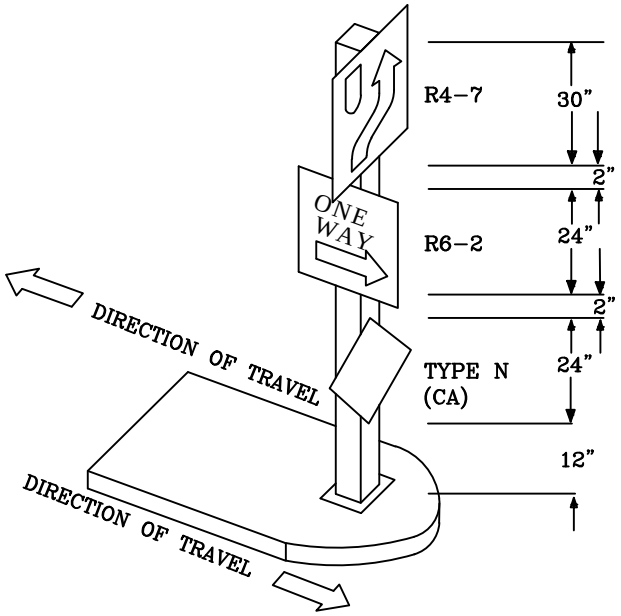

TYPE "A"

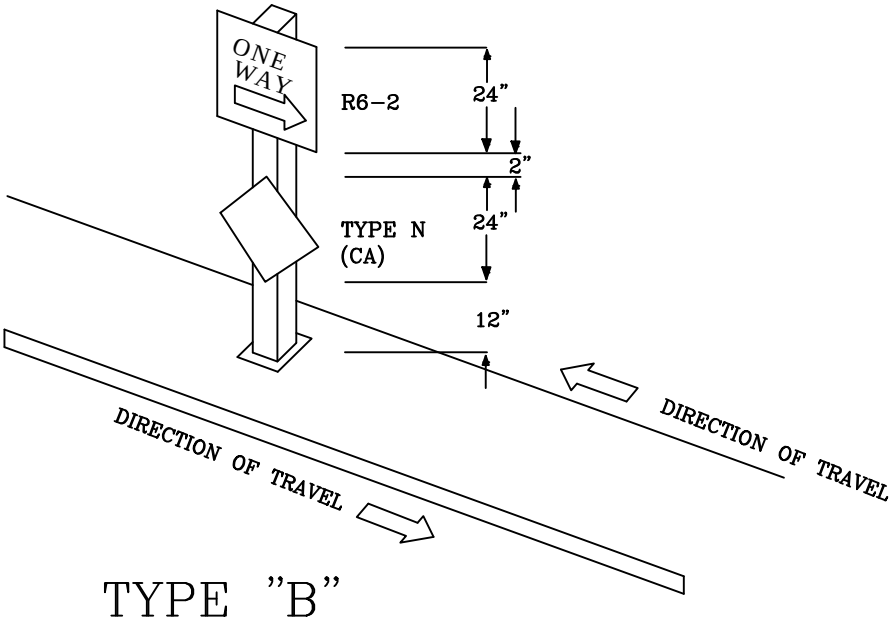

TYPE "B"

MEDIAN SIGNAGE

MARK CARROLL, R.C.E. 31515
CITY OF IRVINE - CITY ENGINEER

AUGUST 2013
DATE

STD. PLAN 110A

SHEET 1 OF 1

CITY OF IRVINE
PUBLIC WORKS

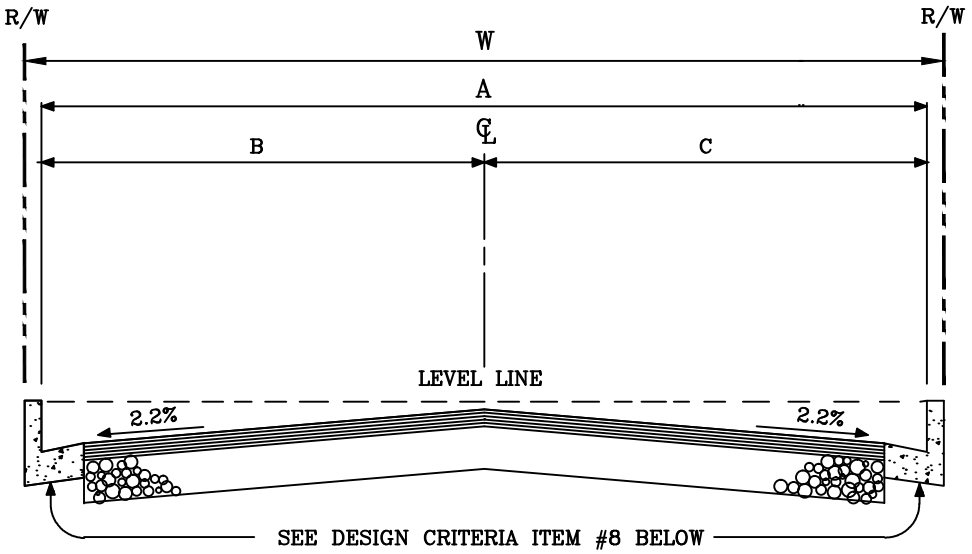

ACCESS ALLOWED	PARKING	A	B	C
ONE SIDE	NONE	24'	12'	12'
ONE SIDE	ONE SIDE	30'	12'	18'
ONE SIDE	BOTH SIDES	36'	18'	18'
BOTH SIDES	NONE	26'	13'	13'
BOTH SIDES	ONE SIDE	32'	14'	18'
BOTH SIDES	BOTH SIDES	36'	18'	18'

DESIGN CRITERIA

1. THE DESIGN SPEED SHALL BE 20 MPH.
2. A MINIMUM DISTANCE OF 90 FEET SHALL BE PROVIDED BETWEEN THE CENTERLINES OF PRIVATE WAYS.
3. "W" IS MEASURED FROM BACK OF CURB TO BACK OF CURB.
4. THE MINIMUM WIDTH OF "A" SHALL BE 28 FEET IN VERY HIGH FIRE HAZARD SEVERITY ZONES.
5. SEE STANDARD PLAN NO. 201 FOR SIDEWALK REQUIREMENTS AND DETAIL.
6. STRUCTURAL SECTION TO BE DETERMINED BY SOILS TEST AND APPROVED BY THE CITY ENGINEER. MINIMUM SECTION SHALL BE 0.25 FEET A.C. OVER 0.50 FEET A.B. FOR STREETS USING ONE LIFT OF 1/2 INCH DIAMETER PG 64-10 A.C., OR 0.35 FEET A.C. OVER 0.5 FEET A.B. FOR STREETS USING BASE COURSE OF 0.25 FEET A.C. WITH A FINISH COURSE OF 0.1 FEET A.C. THE FINAL LIFT SHALL CONSIST OF 1/2 INCH DIAMETER PG 64-10 A.C. ALL LIFTS EXCEPT THE FINAL LIFT SHALL CONSIST OF 3/4 INCH DIAMETER PG 64-10 A.C.
7. THE MINIMUM GRADE SHALL BE 1.0% AT THE CENTERLINE UNLESS OTHERWISE APPROVED BY CITY ENGINEER.
8. SEE STANDARD PLAN NUMBER 200 AND 200A FOR CURB AND GUTTER DETAIL.
9. THE MAXIMUM DEAD-END LENGTH WITH TURN-AROUND SHALL BE 1000 FEET MEASURED FROM THE CENTERLINE OF AN INTERSECTING PRIVATE WAY OR STREET.

PRIVATE WAY

MARK CARROLL, R.C.E. 31515
CITY OF IRVINE - CITY ENGINEER

AUGUST 2013
DATE

STD. PLAN 111

SHEET 1 OF 2

DEFINITION

A PRIVATE WAY IS A LOW-SPEED ROADWAY FOR GENERAL CIRCULATION IN RESIDENTIAL NEIGHBORHOODS TO ACCESS RESIDENTIAL UNITS, GARAGES AND PARKING AREAS. THE MAXIMUM AVERAGE DAILY TRAFFIC ON A PRIVATE WAY SHALL NOT EXCEED 850 TRIPS.

NOTES

1. WHEN THE AVERAGE DAILY TRAFFIC ON THE PRIVATE WAY EXCEEDS 850 TRIPS THE ENTIRE PRIVATE WAY SHALL BE DESIGNATED A PRIVATE LOCAL STREET AND SHALL BE DESIGNED IN ACCORDANCE WITH CITY STANDARD PLAN 104 FOR RESIDENTIAL LOCAL STREETS.
2. THE LATEST IRVINE TRANSPORTATION ANALYSIS MODEL (ITAM) SHALL BE USED IN DETERMINING AVERAGE DAILY TRAFFIC ON A PRIVATE WAY.
3. THE WIDTH OF A ROADWAY WHICH LACKS CURB AND GUTTER SHALL BE MEASURED IN ACCORDANCE WITH STANDARD 200 AND 200A.
4. THE WIDTH OF A ROADWAY WHICH LACKS CURB AND GUTTER SHALL BE MEASURED FROM THE EDGE OF THE PAVEMENT.
5. AN EASEMENT FOR SIDEWALK PURPOSES SHALL BE DEDICATED TO THE HOME OWNERS ASSOCIATION ON THE PRIVATE WAY IN AREAS WHERE ON STREET PARKING IS PROPOSED AN IN AREAS REQUIRED TO MAINTAIN CONTINUITY IN THE PEDESTRIAN CIRCULATION NETWORK.
6. DRIVEWAYS SERVING ONE RESIDENTIAL UNIT SHALL BE CONSTRUCTED IN CONFORMANCE WITH STANDARD PLAN 204 OR 205 (TYPE II-B).
7. DRIVEWAYS SERVING A PRIVATE COURT SHALL BE CONSTRUCTED IN CONFORMANCE WITH STANDARD PLAN 204 OR 205 (TYPE II-B).
8. ALL PEDESTRIAN ACCESS LOCATIONS SHALL CONFORM TO THE LATEST TITLE 24 AND AMERICANS WITH DISABILITIES ACT (ADA) REQUIREMENTS.
9. WHEN A PRIVATE WAY INTERSECTS WITH A PRIVATE OR PUBLIC STREET NO PARKING SHALL BE PERMITTED WITHIN 20' OF ECR OR BCR ON THE PRIVATE WAY.
10. NO LANDSCAPING OR STRUCTURES WITHIN THE LIMITED USE AREA SHALL EXCEED 30 INCHES IN HEIGHT ABOVE THE ADJACENT TOP OF CURB (SEE STANDARD PLAN 403 FOR DETERMINATION OF LIMITED USE AREA).
11. TOE OF SLOPES SHALL NOT ENCROACH INTO THE LIMITED USE AREA.
12. PRIVATE WAY TO PRIVATE WAY OR LOCAL STREET INTERSECTION SHALL HAVE A MINIMUM RADIUS OF 20 FEET.

CITY OF IRVINE
PUBLIC WORKS

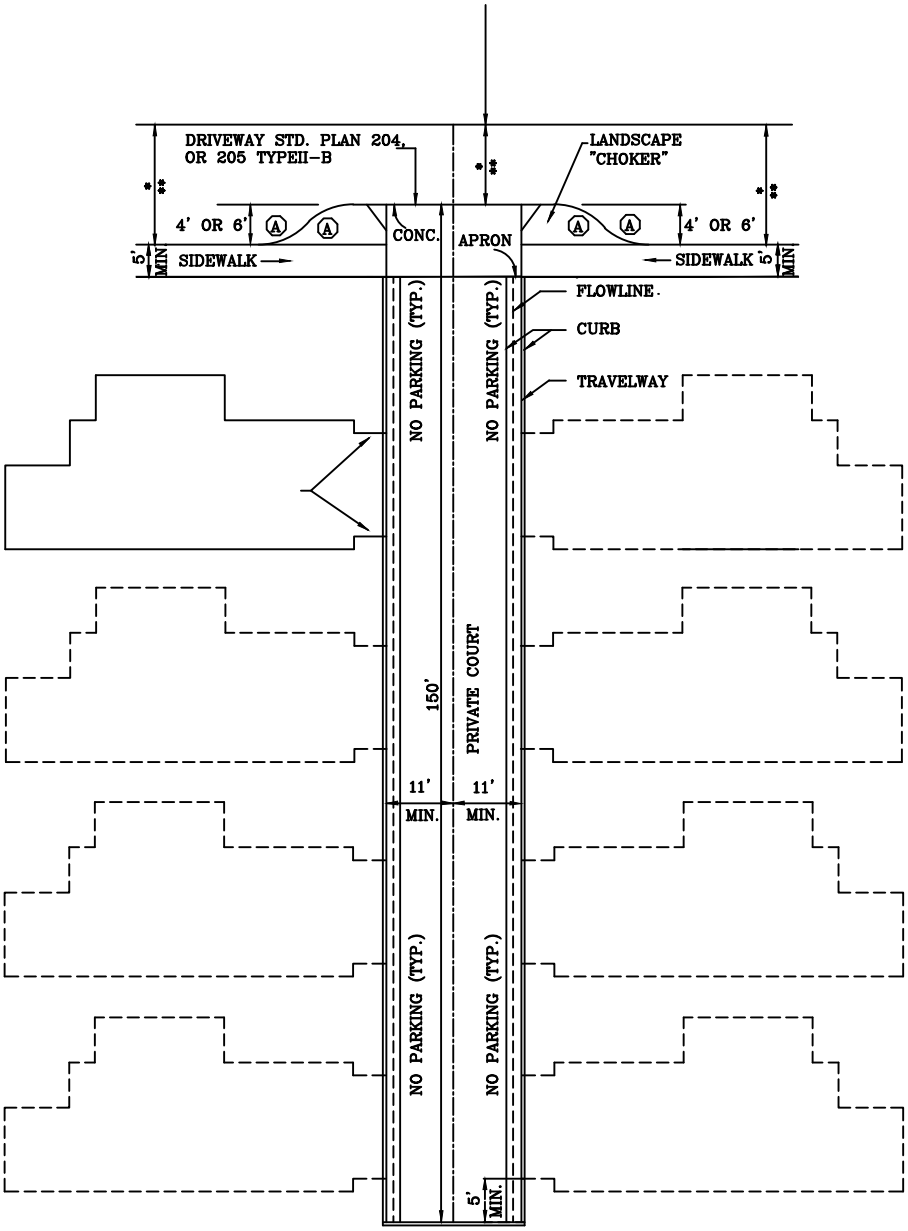

* – PUBLIC/PRIVATE STREET – PAVEMENT WIDTH SHALL BE IN ACCORDANCE WITH STANDARD PLAN 104.

** – PRIVATE WAY – PAVEMENT WIDTH SHALL BE IN ACCORDANCE WITH STANDARD PLAN 111.

WITH CHOKER

PRIVATE COURT

MARK CARROLL, R.C.E. 31515
CITY OF IRVINE - CITY ENGINEER

AUGUST 2013
DATE

STD. PLAN 112

SHEET 1 OF 3

CITY OF IRVINE
PUBLIC WORKS

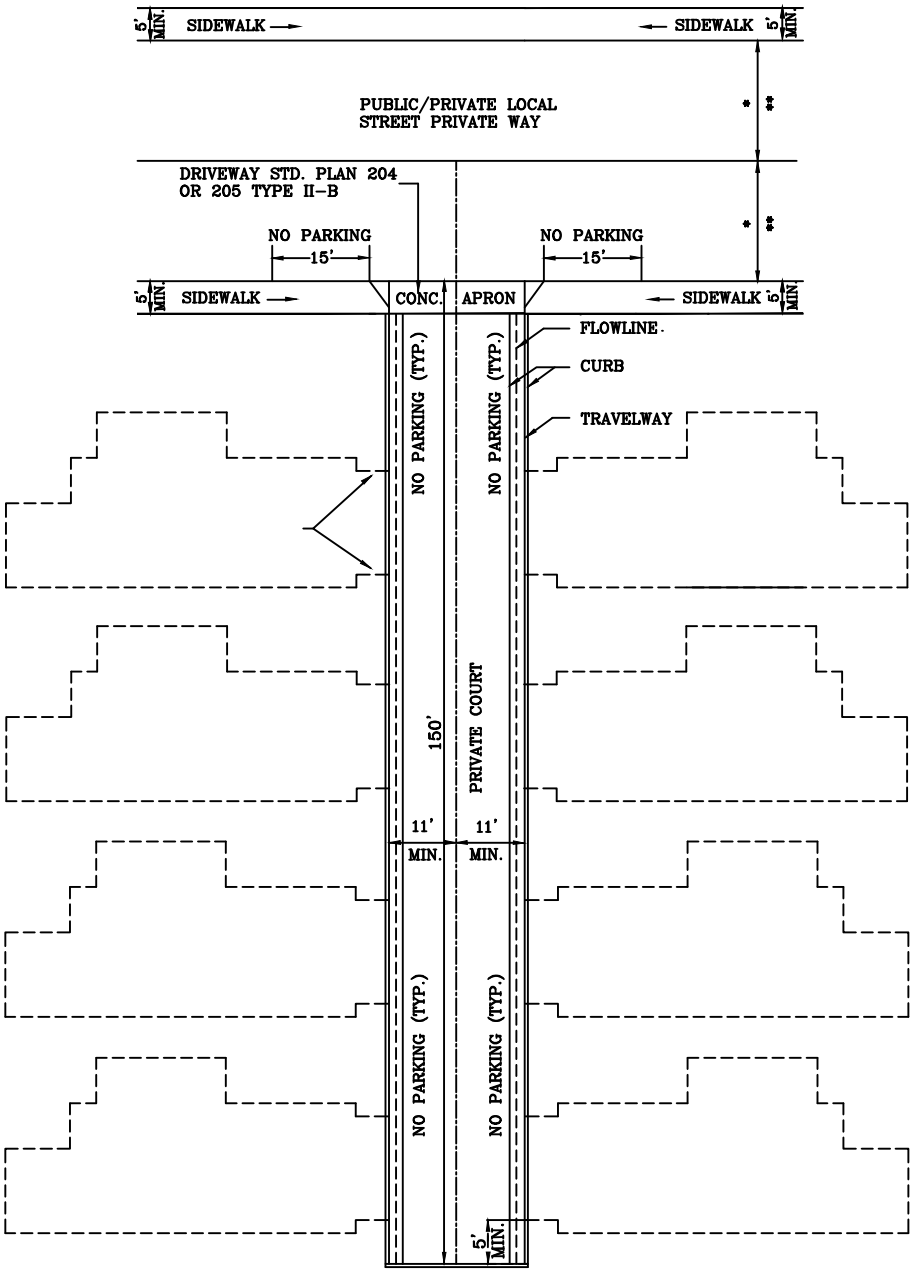

* – PUBLIC/PRIVATE STREET – PAVEMENT WIDTH SHALL BE IN ACCORDANCE WITH STANDARD PLAN 104.
** – PRIVATE WAY – PAVEMENT WIDTH SHALL BE IN ACCORDANCE WITH STANDARD PLAN 111.

WITHOUT CHOKER

PRIVATE COURT

MARK CARROLL, R.C.E. 31515
CITY OF IRVINE - CITY ENGINEER

AUGUST 2013
DATE

STD. PLAN 112

SHEET 2 OF 3

DEFINITION

A PRIVATE COURT IS A LOW-SPEED, LOW-VOLUME, DEAD-END TRAVELED-WAY IN RESIDENTIAL NEIGHBORHOODS TO ACCESS RESIDENTIAL GARAGES AND PARKING AREAS. THE MAXIUM AVERAGE DAILY TRAFFIC ON A PRIVATE COURT SHALL NOT EXCEED 120 TRIPS.

DESIGN CRITERIA

1. SHALL BE DESIGNED TO ACCOMODATE A MINIMUM 38 FOOT "OUTSIDE" VEHILE TURNING RADIUS.
2. A MINIMUM CENTERLINE DISTANCES BETWEEN PRIVATE COURTS SHALL BE 75 FEET.
3. THE MAXIMUM DEAD END LENGTH WITH NO TURN AROUND SHALL BE 150 FEET MEASURED FROM THE CURB FACE OF AN INTERSECTING PRIVATE WAY.
4. THE MAXIMUM DEAD END LENGTH WITH TURN AROUND SHALL BE 320 FEET MEASURED FROM THE CURB FACE OF AN INTERSECTING PRIVATE WAY.
5. THE STRUCTURAL SECTION SHALL BE DETERMINED BY A SOILS TEST AND APPROVED BY THE CITY ENGINEER.
6. THE MINIMUM PAVEMENT CROSS SLOPE SHALL BE 2.2%.
7. THE MINIMUM GRADE SHALL BE 1.0% AT THE CENTERLINE UNLESS OTHERWISE APPROVED BY THE CITY ENGINEER.
8. SEE STANDARD PLAN NO. 200 AND 200A FOR CURB AND GUTTER DETAIL.
9. MINIMUM RADIUS OF 15 FEET SHALL BE USED AT INTERSECTIONS OF PRIVATE COURT TO PRIVATE COURT.

NOTES

1. WHEN THE AVERAGE DAILY TRAFFIC ON THE PRIVATE COURT EXCEEDS 120 TRIPS THE ENTIRE PRIVATE COURT SHALL BE DESIGNATED A PRIVATE WAY AND SHALL BE DESIGNED IN ACCORDANCE WITH CITY STANDARD PLAN 111.
2. THE LATEST IRVINE TRANSPORTATION ANALYSIS MODEL (ITAM) SHALL BE USED IN DETERMINING AVERAGE DAILY TRAFFIC ON A PRIVATE WAY.
3. THE WIDTH OF THE ROADWAY SHALL BE MEASURED IN ACCORDANCE WITH STANDARD PLAN 200 OR 200A.
4. THE WIDTH OF A PRIVATE COURT WITHOUT CURB AND GUTTER SHALL BE MEASURED FROM THE EDGE OF THE PAVEMENT.
5. DRIVEWAYS SERVING ONE RESIDENTIAL UNIT SHALL BE CONSTRUCTED IN CONFORMANCE WITH STANDARD PLAN 204 OR 205 (TYPE II-B).
6. THE MOUNTABLE CURB SHALL ACCOMODATE STORMWATER DRAINAGE IN ACCORDANCE WITH CITY STANDARDS.
7. ENHANCED PAVEMENT MAY BE USED ON THE PRIVATE COURT.
8. ALL PEDESTRIAN ACCESS LOCATIONS SHALL CONFORM TO THE LATEST TITLE 24 AND AMERICANS WITH DISABILITIES ACT (ADA) REQUIREMENTS.

PRIVATE COURT

MARK CARROLL, R.C.E. 31515
CITY OF IRVINE - CITY ENGINEER

AUGUST 2013
DATE

STD. PLAN 112

CITY OF IRVINE
PUBLIC WORKS

	CURVE RADIUS
Ⓐ	25' MINIMUM
Ⓑ	25'

NOTE:

STREET DRAINAGE FLOW SHALL FOLLOW THE CURB AND GUTTER.

* – PAVEMENT WIDTH SHALL BE IN ACCORDANCE WITH STANDARD PLAN 104 AND 104A

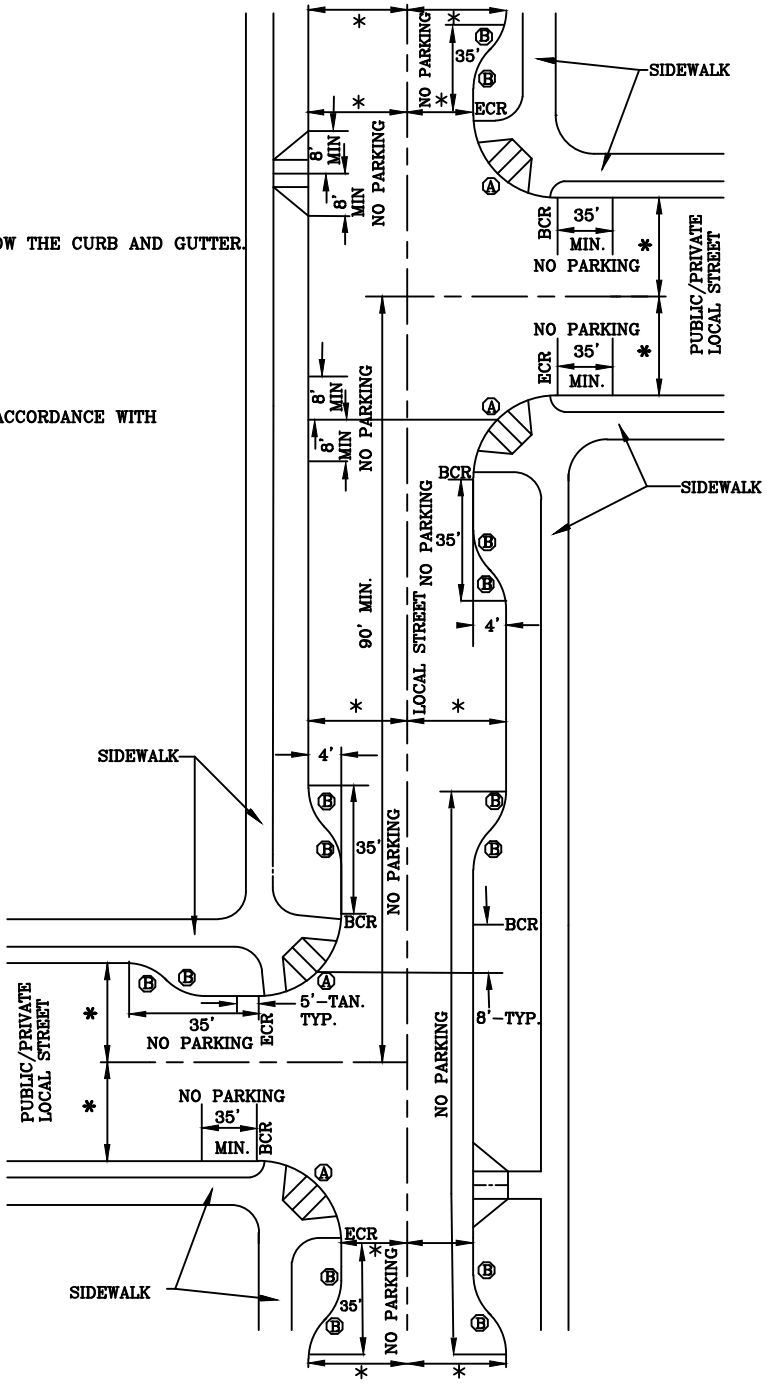

CHOKERS (LOCAL STREETS)

MARK CARROLL, R.C.E. 31515
CITY OF IRVINE - CITY ENGINEER

AUGUST 2013
DATE

STD. PLAN 113

SHEET 1 OF 1

CITY OF IRVINE
PUBLIC WORKS

	CURVE RADIUS
(A)	17' MINIMUM
(B)	25'

NOTE:

STREET DRAINAGE FLOW SHALL FOLLOW THE CURB AND GUTTER.

* – PAVEMENT WIDTH SHALL BE IN ACCORDANCE WITH STANDARD PLAN 104 AND 104A

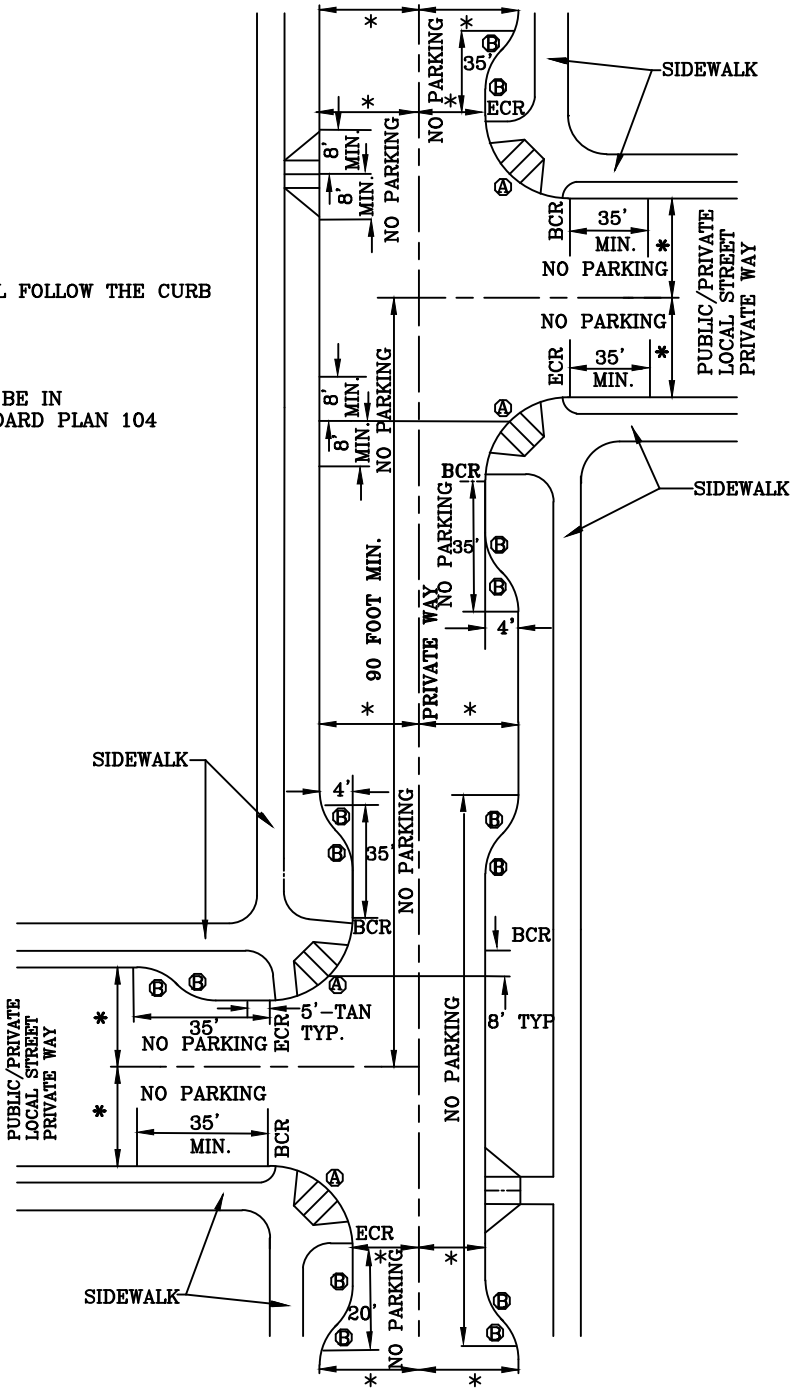

CHOKERS (PRIVATE WAYS)

MARK CARROLL, R.C.E. 31515
CITY OF IRVINE - CITY ENGINEER

AUGUST 2013
DATE

STD. PLAN 113A

SHEET 1 OF 1

CITY OF IRVINE
PUBLIC WORKS

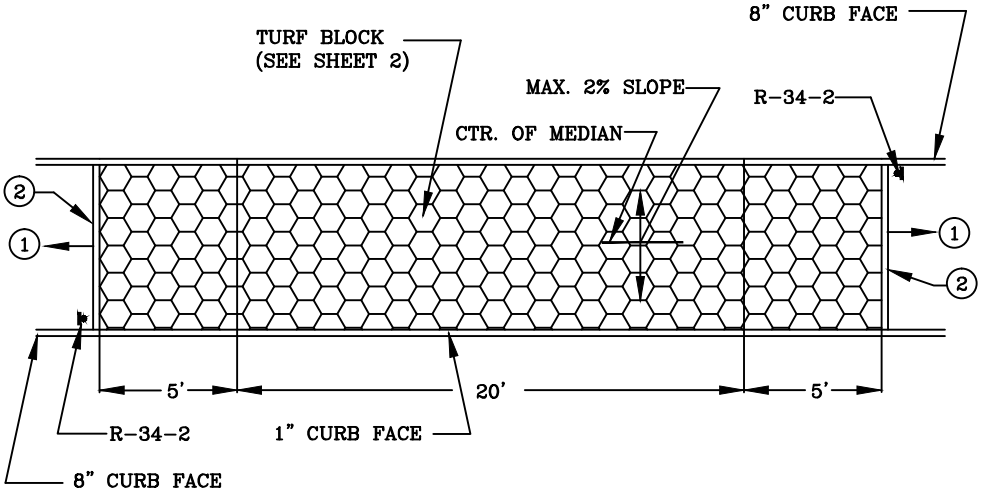

1 30 FOOT MINIMUM DISTANCE TO TREES OR LANDSCAPING OVER 2 FEET IN HEIGHT.

2 6 INCH WIDE CONCRETE HEADER IN ACCORDANCE WITH STANDARD PLAN 600.

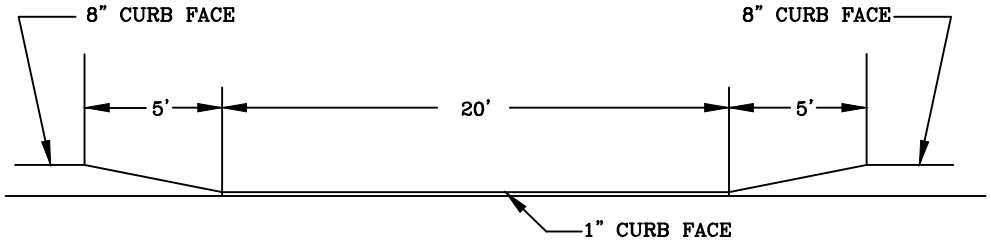

NOTES:

1. MINIMUM MEDIAN WIDTH SHALL BE 14 FEET FOR EMERGENCY VEHICLE TURN-AROUND.
2. FOR NEW EMERGENCY VEHICLE MEDIAN TURN-AROUND ON EXISTING STREETS, 12 INCHES OF EXISTING ASPHALT FROM THE MEDIAN SHALL BE REMOVED AND REPLACED IN KIND.
3. EMERGENCY VEHICLE MEDIAN TURN-AROUND LOCATIONS SHALL BE INSTALLED IF THE INTERSECTION CENTERLINE SPACING IS 2800 FEET OR GREATER.
4. THE LOCATION OF TURN AROUND SHALL BE MID POINT BETWEEN STREET CENTERLINE OR AS REQUIRED BY THE CITY ENGINEER.

EMERGENCY VEHICLE MEDIAN TURN-AROUND

MARK CARROLL, R.C.E. 31515
CITY OF IRVINE - CITY ENGINEER

AUGUST 2013
DATE

STD. PLAN 114

SHEET 1 OF 2

CITY OF IRVINE

PUBLIC WORKS

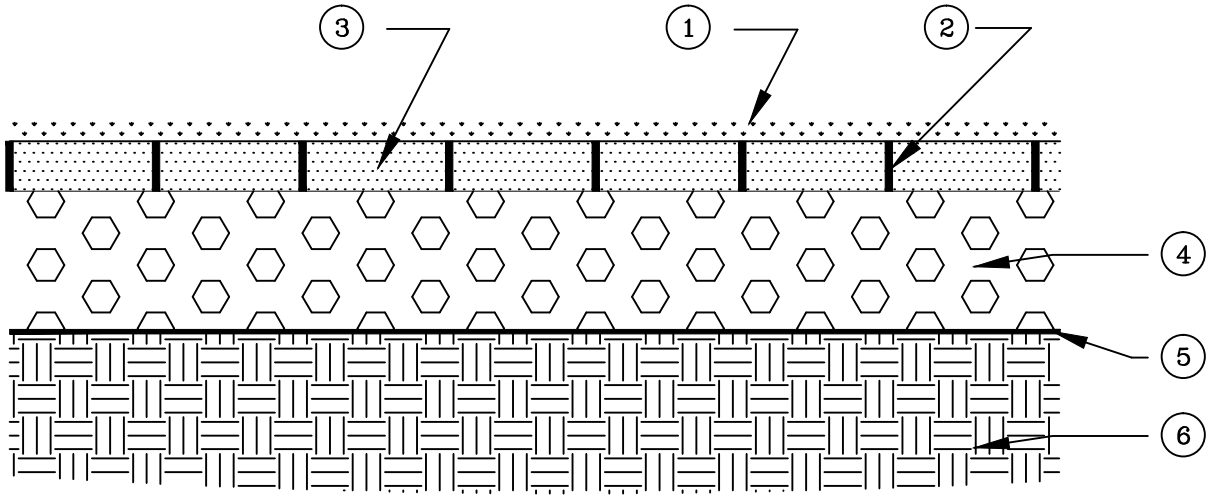

TURF BLOCK SECTION

1. TURF GRASS OR GROUNDCOVER LANDSCAPING APPROVED BY THE CITY ENGINEER.
2. TURF BLOCK MATERIAL TO BE APPROVED BY THE CITY ENGINEER.
3. WASHED CONCRETE SAND INSTALLED PURSUANT TO TURF BLOCK MANUFACTURE'S SPECIFICATIONS.
4. STRUCTURAL SECTION TO BE DETERMINED BY SOILS TEST AND APPROVED BY THE CITY ENGINEER.
5. STABLILIZATION GEOTEXTILE MATERIAL INSTALLED TO MANUFACTURE'S SPECIFICATIONS.
6. 95% RELATIVE COMPACTED SUB GRADE.

EMERGENCY VEHICLE MEDIAN TURN-AROUND

MARK CARROLL, R.C.E. 31515
CITY OF IRVINE - CITY ENGINEER

AUGUST 2013
DATE

STD. PLAN 114

SHEET 2 OF 2

CITY OF IRVINE
PUBLIC WORKS

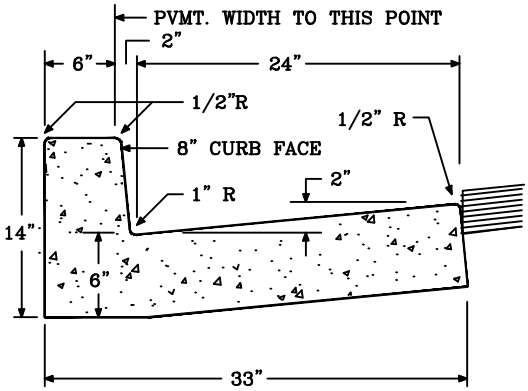

CONC. PER L.F. = .0645 CU. YDS.
1 CU. YD. = 15.5 L.F.

TYPE "A-2"

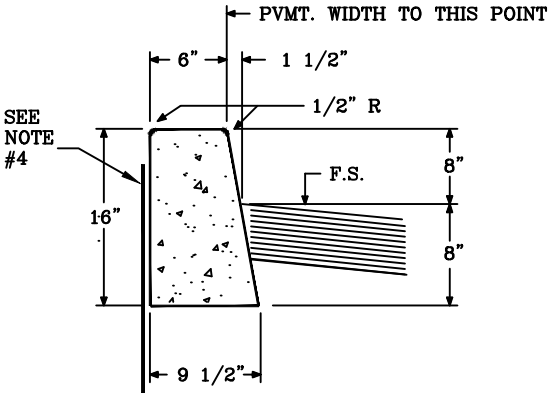

CONC. PER L.F. = .0319 CU. YDS.
1 CU. YD. = 31.3 L.F.

TYPE "B-8"

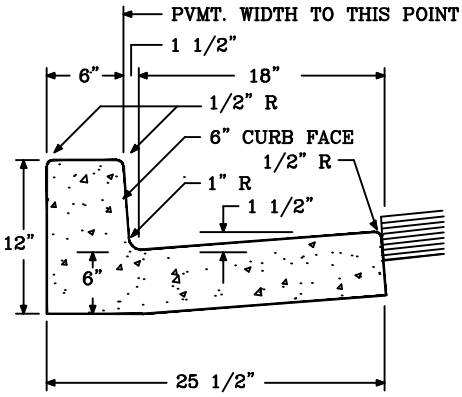

CONC. PER L.F. = .0505 CU. YDS.
1 CU. YD. = 19.8 L.F.

TYPE "D"

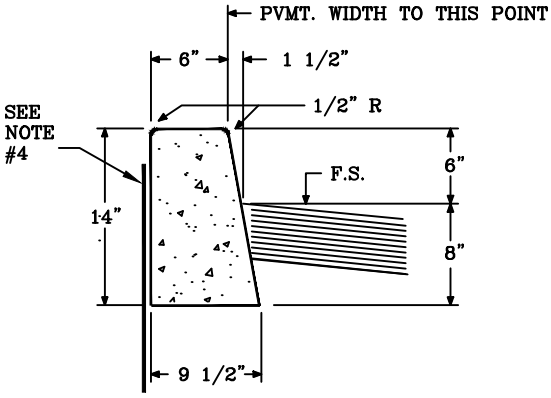

CONC. PER L.F. = .0279 CU. YDS.
1 CU. YD. = 35.8 L.F.

TYPE "B-6"

CONCRETE CURBS AND GUTTERS

MARK CARROLL, R.C.E. 31515
CITY OF IRVINE - CITY ENGINEER

AUGUST 2013
DATE

STD. PLAN 200

SHEET 1 OF 2

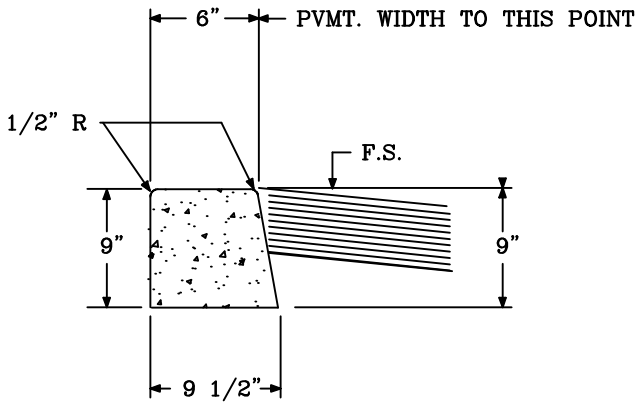

CONC. PER L.F. = .0161 CU. YDS.
1 CU. YD. = 62.1 L.F.

TYPE "C-6"

NOT TO BE USED ON PUBLIC STREET R/W

NOTES :

1. ALL CURBS AND GUTTERS SHALL BE PORTLAND CEMENT CONCRETE. CONTROL
2. WEAKENED PLANE JOINTS PURSUANT TO SECTION 303-5.4.3 OF THE GREENBOOK (EXCEPTION: MAX. 10 FOOT INTERVALS)
3. PAVEMENT SHALL BE 3/8 INCH HIGHER THAN EDGE OF GUTTER ON TYPE "A-2" AND TYPE "D".
4. MOISTURE BARRIERS SHALL BE REQUIRED IN ACCORDANCE WITH STD. PLAN No. 222.

CONCRETE CURBS AND GUTTERS

MARK CARROLL, R.C.E. 31515
CITY OF IRVINE - CITY ENGINEER

AUGUST 2013
DATE

STD. PLAN
200

CITY OF IRVINE
PUBLIC WORKS

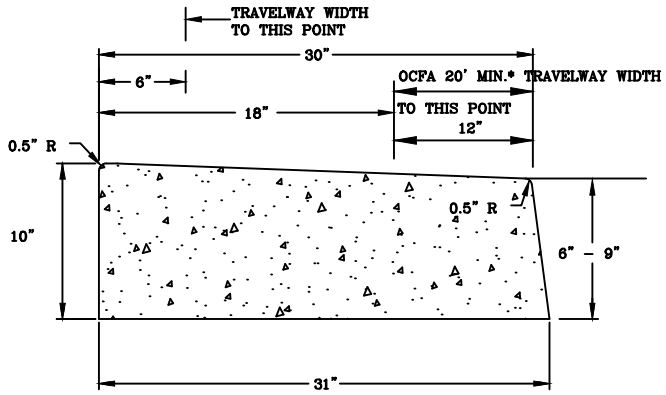

1" – 4" SHED CURB

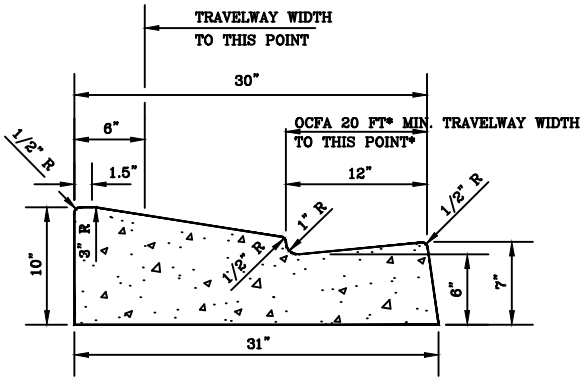

4" FLARED CURB

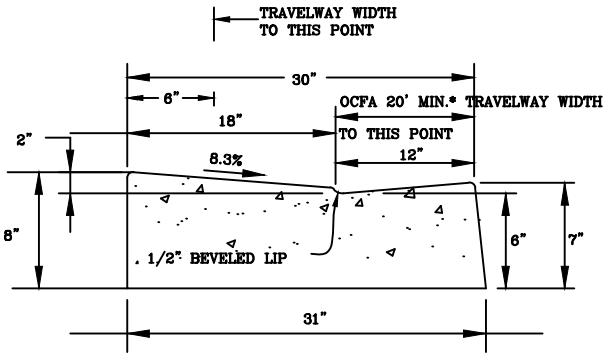

2" FLARED CURB

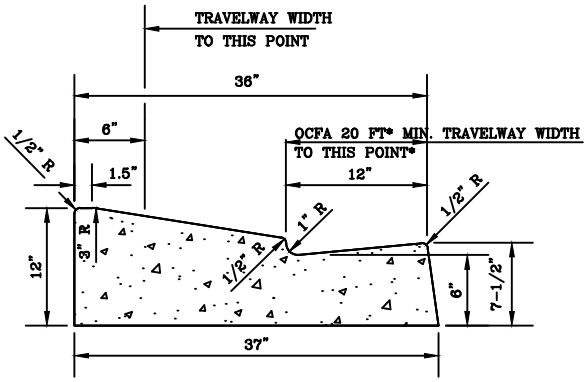

6" FLARED CURB

NOTE:

1. CURB CORES WILL NOT BE ALLOWED. YARD DRAINS MUST CONNECT DIRECTLY TO THE UNDERGROUND STORM DRAIN SYSTEM.
2. ASPHALT CONCRETE PAVEMENT SHALL BE MAXIMUM 3/8" HIGHER THAN EDGE OF GUTTER.
3. 4" AND 6" FLARED CURB SHALL NOT BE USED FOR PRIVATE COURTS.

*28' MINIMUM TRAVELWAY WIDTH IN VERY HIGH FIRE HAZARD SEVERITY ZONES (OCFA)

PRIVATE COURT/WAY CURB AND GUTTER

MARK CARROLL, R.C.E. 31515
CITY OF IRVINE - CITY ENGINEER

AUGUST 2013
DATE

STD. PLAN 200A

SHEET 1 OF 1

CITY OF IRVINE
PUBLIC WORKS

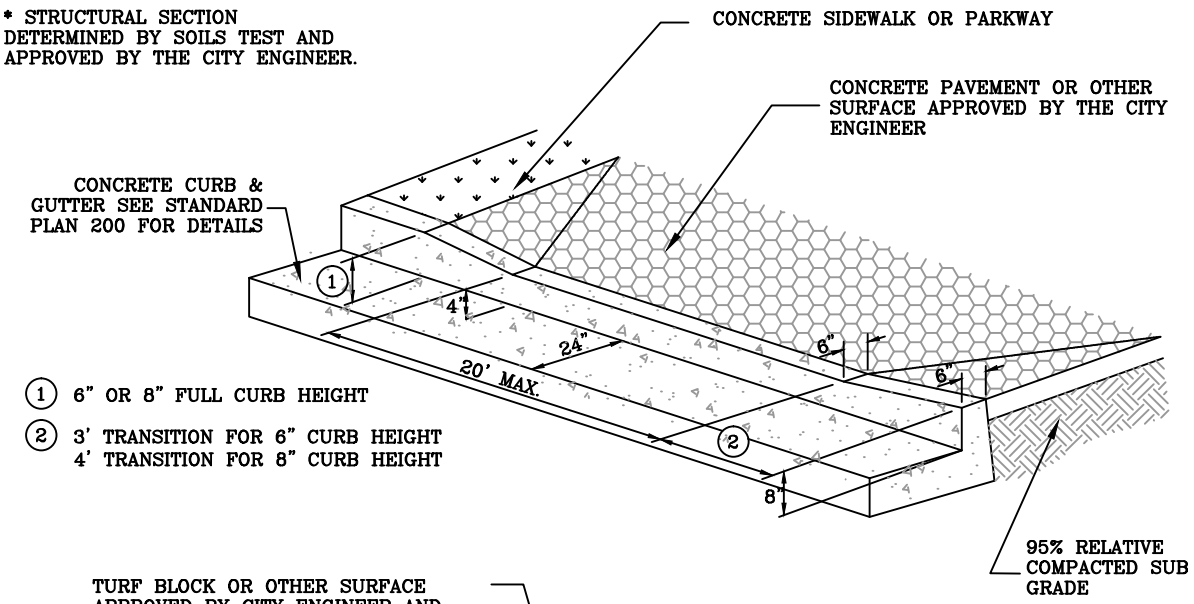

1 6" OR 8" FULL CURB HEIGHT

2 3' TRANSITION FOR 6" CURB HEIGHT
4' TRANSITION FOR 8" CURB HEIGHT

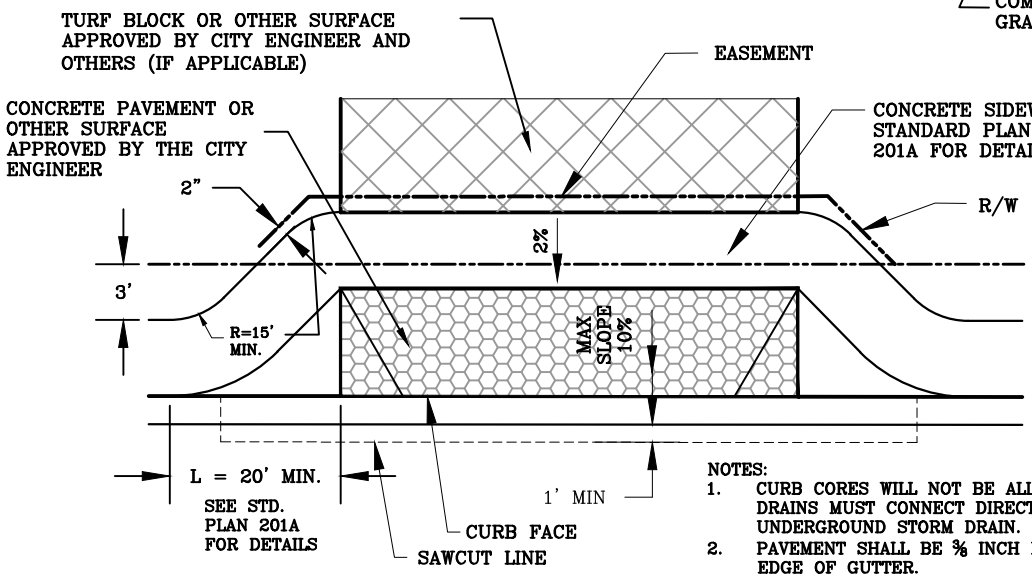

NOTES:

1. CURB CORES WILL NOT BE ALLOWED YARD DRAINS MUST CONNECT DIRECTLY TO THE UNDERGROUND STORM DRAIN.
2. PAVEMENT SHALL BE ⅜ INCH HIGHER THAN EDGE OF GUTTER.
3. DEPRESSED CURBS SHALL BE USED FOR EMERGENCY OR MAINTENANCE ACCESS ONLY.

* IF SIDEWALK IS LOCATED OUTSIDE OF THE PUBLIC RIGHT OF WAY THEN A SIDEWALK EASEMENT SHALL BE DEDICATED TO CITY OF IRVINE.

4 INCH CONC. DEPRESSED CURB

DEPRESSED CURB

MARK CARROLL, R.C.E. 31515
CITY OF IRVINE - CITY ENGINEER

AUGUST 2013
DATE

STD. PLAN 200B

SHEET 1 OF 1

CITY OF IRVINE
PUBLIC WORKS

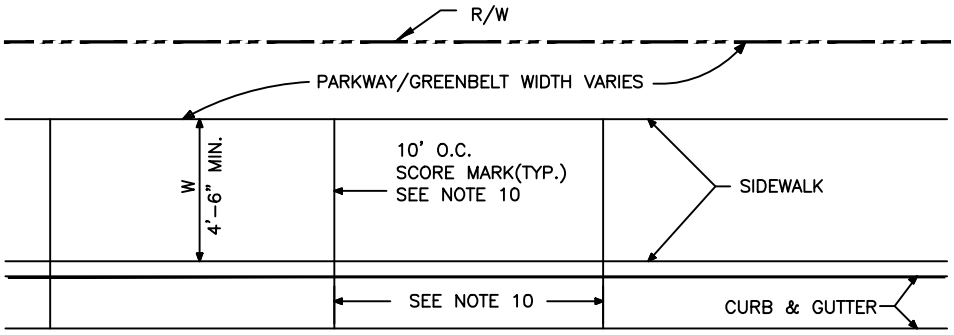

Notes:

1. Thickness of sidewalk shall be 4-inches except in driveway aprons (See City Standard Plan 204, 205 and/or 206). For sidewalk locations with the need for maintenance vehicle use, a recommended pavement structural section shall be submitted and approved by the City Engineer.
2. Curb and gutter should have 2" deep weakened plane joints at the ends of curb returns and score marks at intervals shown hereon pursuant to Section 303-5.4.3 of the Greenbook. Plastic control joints are not allowed. Joints shall have edges with 1/8-inch radii.
3. See curb return (Standard Plan 202) and driveway standards (Standard Plan 204, 205, and 206) for additional control joint requirements.
4. Sidewalk shall be Portland Cement Concrete in accordance with Standard Plan 405.
5. All soils shall be brought to maximum saturation as required in the approved soils report. The soils engineers shall provide certification on the form provided by the City stating the moisture content has been maintained as required prior to and during the placement of concrete. In hillside areas, soil shall be saturated as recommended by the soils engineer and approved by the City Engineer.
6. Sidewalks are required on the side of streets where parking is allowed. Where no parking is allowed, pedestrian circulation shall be provided with a sidewalk or a parkway/greenbelt.
7. Pre-emergent weed killer must be applied prior to construction of sidewalk.
8. See Standard Plan 222 for moisture barrier requirements.
9. Curing compound is required in accordance with the Standard Specifications for Public Works Construction, latest edition.
10. For sidewalks greater than 8-feet wide, additional score marks, aggregate base material, and/or re-bar may be required based upon Geotechnical Engineer recommendation and approval by the City Engineer.
11. 1-1/2-inch deep weakened plane joints on exposed aggregate finishes are allowed.

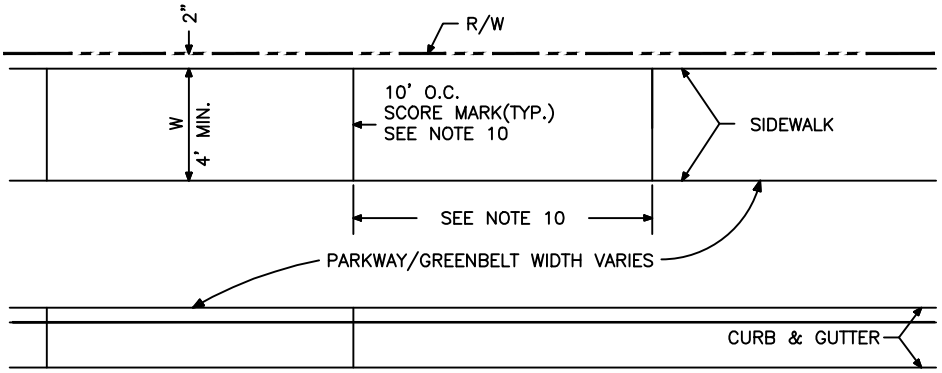

SIDEWALK DETAIL

MARK CARROLL, R.C.E. 31515
CITY OF IRVINE - CITY ENGINEER

AUGUST 2013
DATE

STD. PLAN 201

SHEET 1 OF 2

SIDEWALK CONSTRUCTION JOINT DETAIL

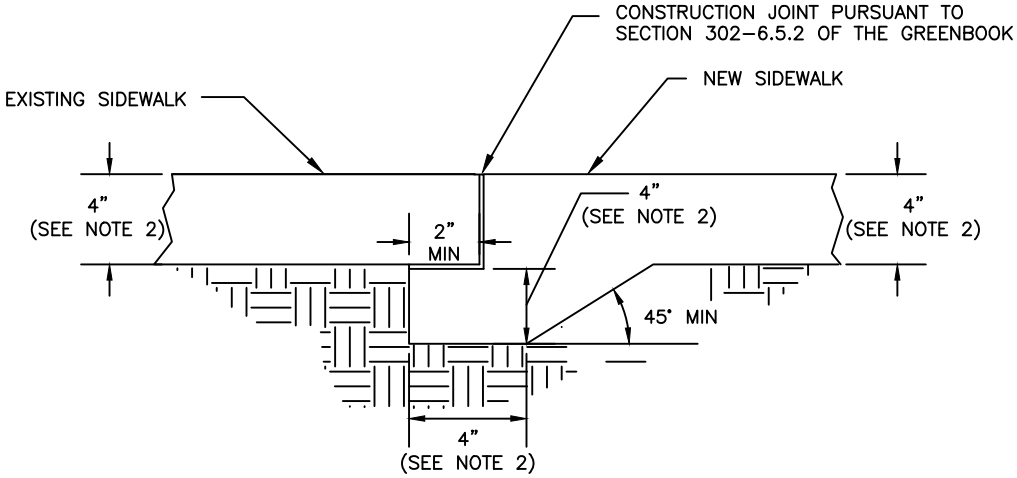

NOTES:

1. All applicable notes from sheet 1 shall apply.
2. New sidewalk section shall be keyed under existing sidewalk. Match existing sidewalk thickness for key dimensions.

WEAKENED PLANE JOINT DETAIL

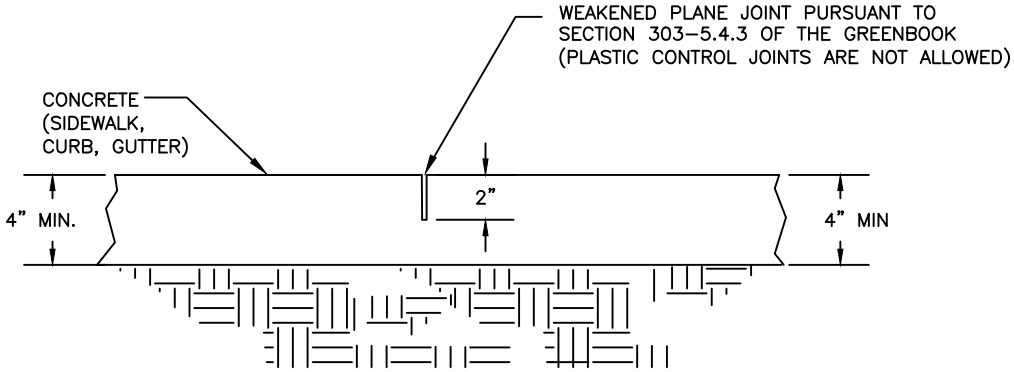

SIDEWALK DETAIL

MARK CARROLL, R.C.E. 31515
CITY OF IRVINE - CITY ENGINEER

AUGUST 2013
DATE

STD. PLAN 201

CITY OF IRVINE

PUBLIC WORKS

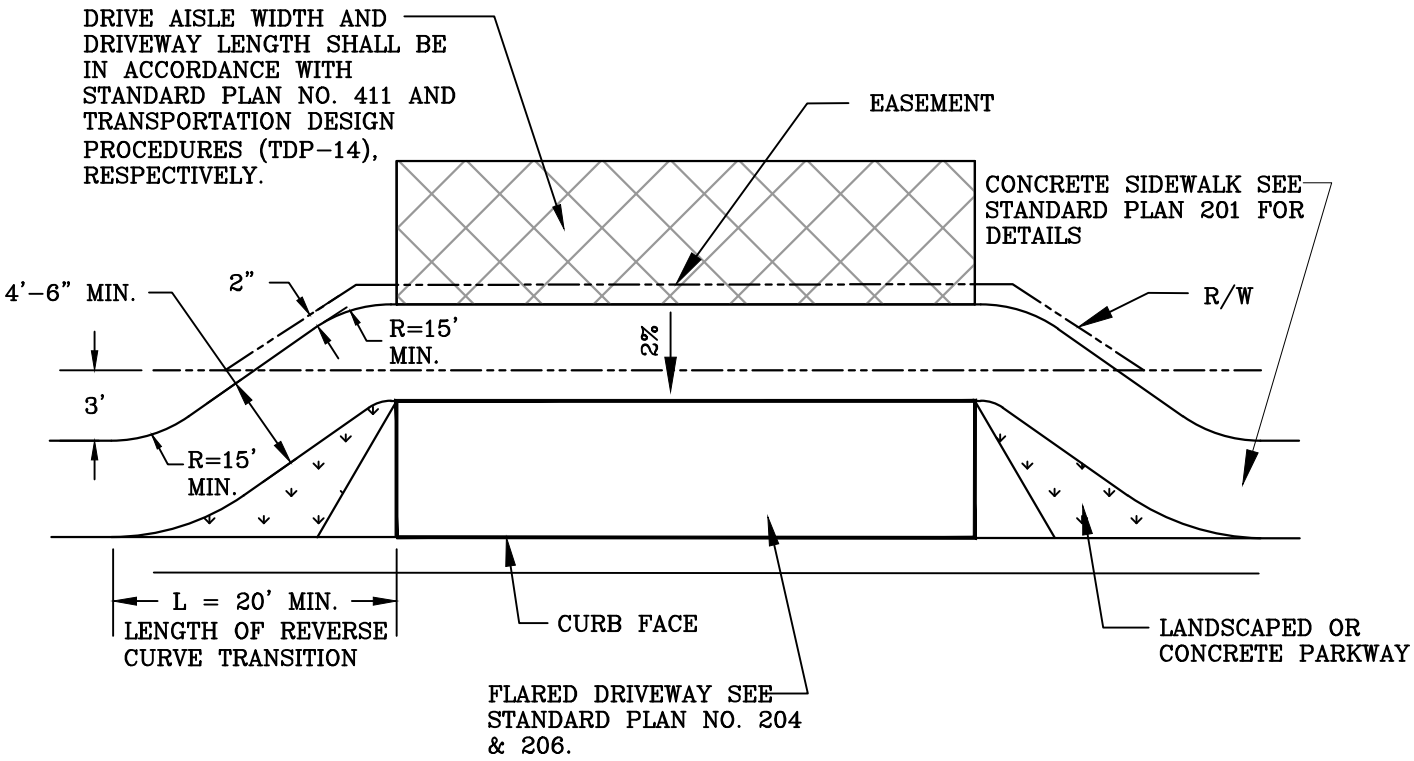

CURB ADJACENT SIDEWALK W/DRIVEWAY DETAIL

* IF THE SIDEWALK IS LOCATED OUTSIDE OF THE PUBLIC RIGHT-OF-WAY THEN A SIDEWALK EASEMENT SHALL BE DEDICATED TO THE CITY OF IRVINE.

NOTES:

1. SEE STANDARD PLAN 201 FOR SIDEWALK DETAILS AND NOTES.
2. SEE STANDARD PLAN 204 AND 206 FOR FLARED DRIVEWAY DETAILS.
3. SEE STANDARD PLAN 205 FOR OTHER DRIVEWAY DETAILS

SIDEWALK DETAIL WITH DRIVEWAY

MARK CARROLL, R.C.E. 31515
CITY OF IRVINE - CITY ENGINEER

AUGUST 2013
DATE

STD. PLAN 201A

SHEET 1 OF 1

CITY OF IRVINE
PUBLIC WORKS

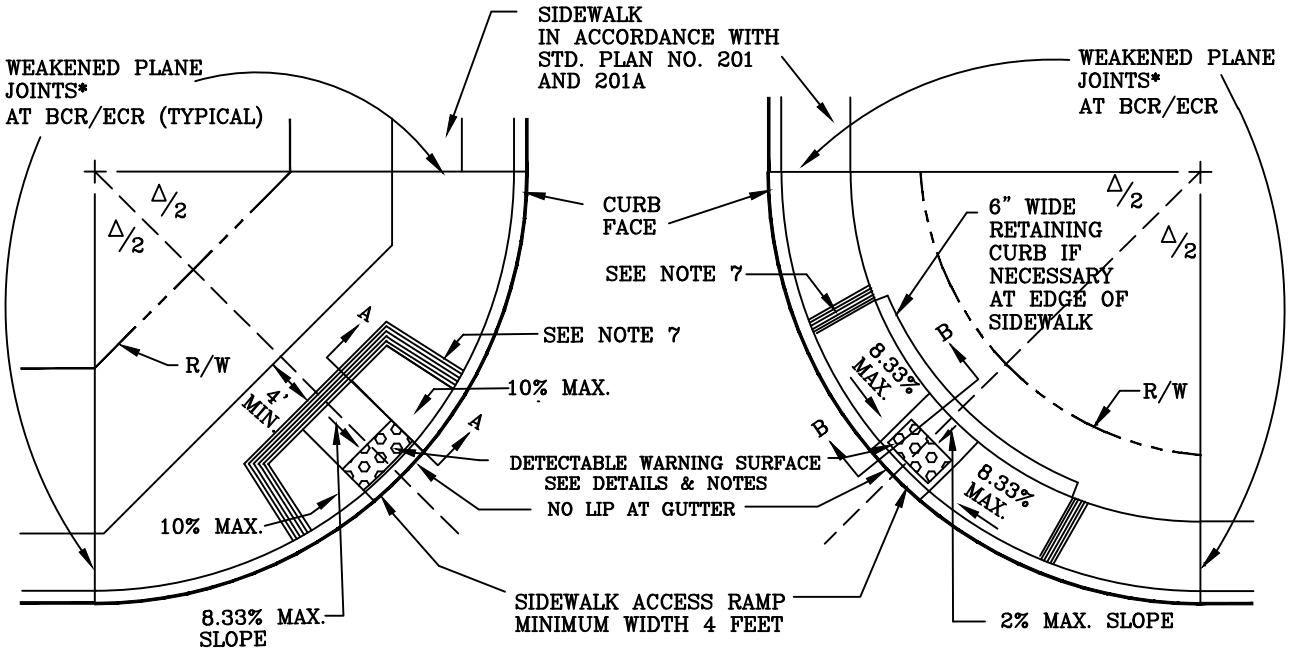

STRAIGHT CORNER CUT-OFF

RADIUS CORNER CUT-OFF
TYPE I-A

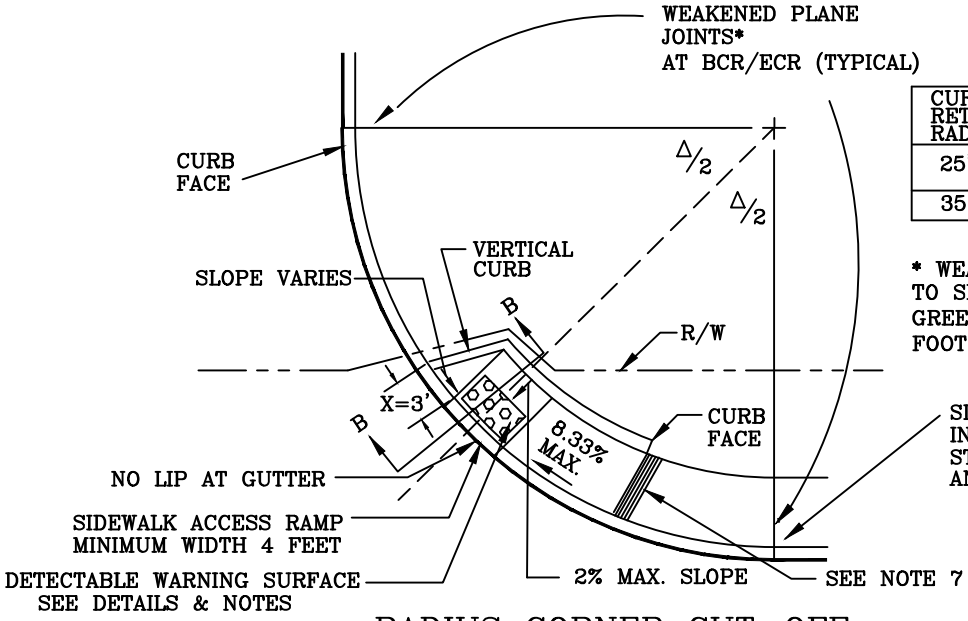

CURB RET. RAD.	APPLICATION
25'	LOCAL STREET INTERSECTING ANOTHER LOCAL STREET
35'	ALL OTHER INTERSECTIONS

* WEAKENED PLANE JOINTS PURSUANT TO SECTION 303-5.4.3 OF THE GREENBOOK (EXCEPTION: MAX. 10 FOOT INTERVALS)

RADIUS CORNER CUT-OFF
TYPE I-B

CURB RETURN DETAILS

MARK CARROLL, R.C.E. 31515
CITY OF IRVINE - CITY ENGINEER

AUGUST 2013
DATE

STD. PLAN 202

SHEET 1 OF 3

CITY OF IRVINE
PUBLIC WORKS

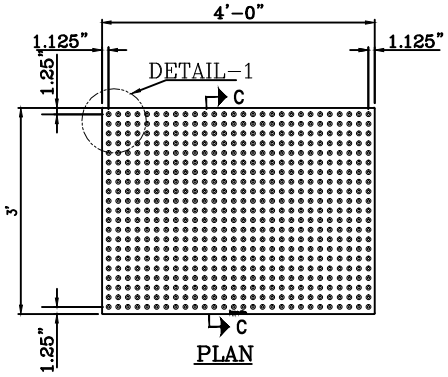

PLAN

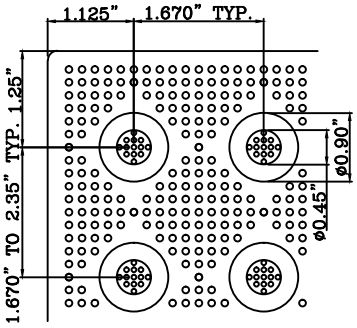

DETAIL-1

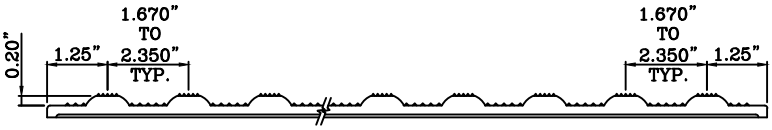

SECTION C-C

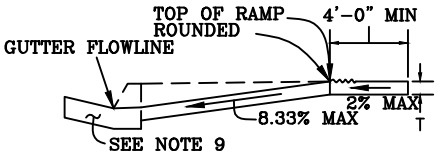

SECTION A-A
SEE SHEET 1

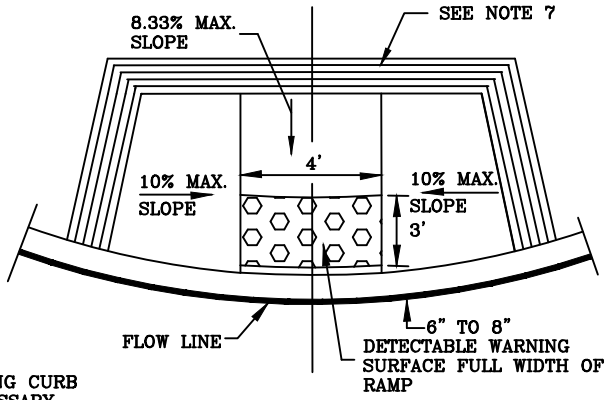

DETECTABLE WARNING SURFACE

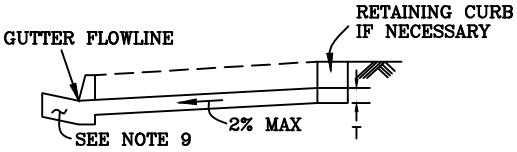

SECTION B-B
SEE SHEET 1

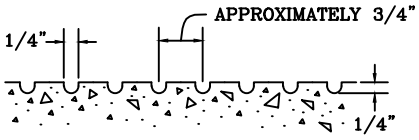

GROOVING DETAIL

CURB RETURN DETAILS

MARK CARROLL, R.C.E. 31515
CITY OF IRVINE - CITY ENGINEER

AUGUST 2013
DATE

STD. PLAN 202

SHEET 2 OF 3

NOTES:

1. STRAIGHT CORNER CUT-OFF CURB RETURN TYPE SHALL BE USED AT ANY ARTERIAL INTERSECTION OR STREET/DRIVEWAY INTERSECTION WITH AN ARTERIAL HIGHWAY OR ANY INTERSECTION THAT IS SIGNALIZED.
2. STRAIGHT OR RADIUS CORNER CUT-OFF MAY BE USED AT LOCAL TO LOCAL STREET INTERSECTIONS.
3. ALTERNATIVE DESIGNS FOR SIDEWALK RETURN RAMPS MAY BE CONSIDERED FOR APPROVAL BY THE CITY ENGINEER.
4. SEE STANDARD NO. 201 AND 201A FOR SIDEWALK DETAIL.
5. APPROVED DETECTABLE WARNING SURFACE IS AS FOLLOWS:
   A) NEW INSTALLATIONS:
      CAST IN PLACE DETECTABLE WARNING SURFACE - MANUFACTURED BY ACCESS TILE
      (562) 842-9934, www.accesstile.com (Part #: ACC-R3x4-BK),
      OR MANUFACTURED BY ADA SOLUTIONS
      (800) 372-0519, www.adatile.com (Part #: 3648REP "BLACK")
      OR MANUFACTURED BY ARMORCAST PRODUCTS COMPANY
      (818) 982-3600, www.armorcastprod.com (Part #: A6003660RADA-BLACK)
      OR APPROVED EQUAL.
   B) RETROFIT INSTALLATIONS
      FLEXIBLE DETECTABLE WARNING SURFACE - MANUFACTURED BY DETECTABLE WARNING SYSTEMS INC.,
      (866) 999-7452, www.detectable-warning.com,
      OR APPROVED EQUAL.
   C) COLOR SHALL BE BLACK OR APPROVED EQUAL.
   D) DETECTABLE WARNING SURFACE SHALL BE FULL WIDTH OF RAMP AND 3 FOOT IN DEPTH.
   E) THE DETECTABLE WARNING SURFACE SHALL BE INSTALLED IN ACCORDANCE WITH THE MANUFACTURERS' RECOMMENDATIONS AND INSTRUCTIONS.
   F) THE MANUFACTURER SHALL PROVIDE A MINIMUM 5-YEAR WARRANTY, GUARANTEEING REPLACEMENT WHEN THERE IS A DEFECT IN THE DOME SHAPE, COLOR FASTNESS, SOUND ON CANE ACOUSTIC QUALITY, OR DETERIORATION OF THE DETECTABLE WARNING SURFACE. THE WARRANTY SHALL COMMENCE ON THE DATE OF ACCEPTANCE BY CITY OF IRVINE.
6. THE EDGE OF THE DETECTABLE WARNING SURFACE NEAREST THE STREET SHALL BE BETWEEN 6" AND 8" FROM THE GUTTER FLOWLINE.
7. THE CURB RAMP SHALL BE OUTLINED, AS SHOWN, WITH A 1'-0" WIDE BORDER WITH 1/4" GROOVES APPROXIMATELY 3/4" ON CENTERS. SEE GROOVE DETAIL.
8. UTILITY PULL BOXES, MANHOLES, VAULTS AND ALL OTHER UTILITY FACILITIES WITHIN THE BOUNDARIES OF THE CURB RAMP SHALL BE RELOCATED OR ADJUSTED TO GRADE PRIOR TO, OR IN CONJUNCTION WITH, CURB RAMP CONSTRUCTION. UTILITY PULL BOXES, MANHOLES, VAULTS AND ALL OTHER FACILITIES SHALL NOT BE LOCATED WITHIN THE ACCESS RAMP.
9. MAXIMUM SLOPES OF ADJOINING GUTTERS, THE ROAD SURFACE IMMEDIATELY ADJACENT TO THE CURB RAMP OR ACCESSIBLE ROUTE SHALL NOT EXCEED 5 PERCENT GRADE WITHIN 4'-0" OF THE TOP AND BOTTOM OF THE CURB RAMP.
10. THERE SHALL BE NO LIP FROM RAMP TO GUTTER OR STREET.
11. WEAKENED PLANE JOINTS SHALL BE PURSUANT TO SECTION 303-5.4.3 OF THE GREENBOOK. PLASTIC CONTROL JOINTS ARE NOT ALLOWED.

CURB RETURN DETAILS

MARK CARROLL, R.C.E. 31515
CITY OF IRVINE - CITY ENGINEER

AUGUST 2013
DATE

STD. PLAN
202

CITY OF IRVINE

PUBLIC WORKS

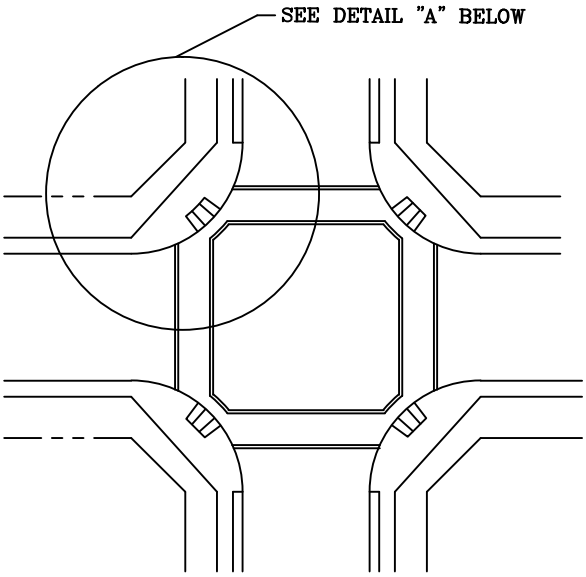

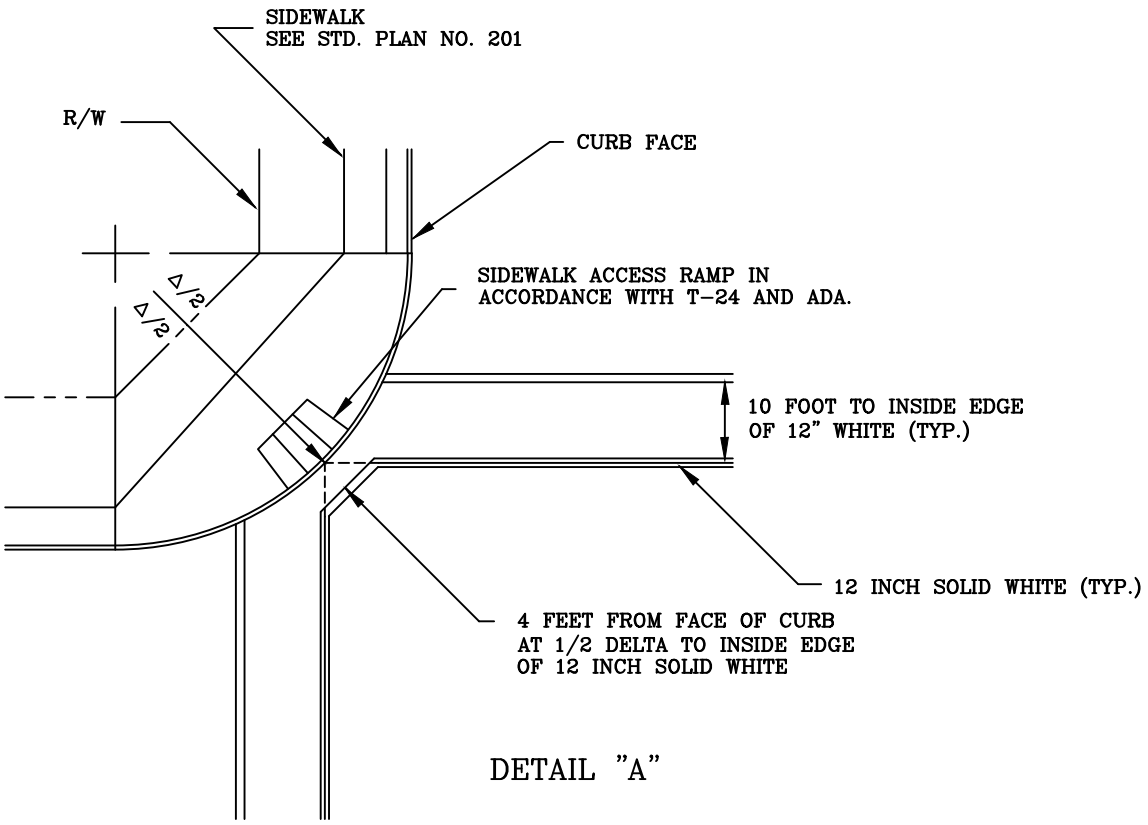

DETAIL "A"

CROSSWALK DETAIL

MARK CARROLL, R.C.E. 31515
CITY OF IRVINE - CITY ENGINEER

AUGUST 2013
DATE

STD. PLAN 203

SHEET 1 OF 1

CITY OF IRVINE
PUBLIC WORKS

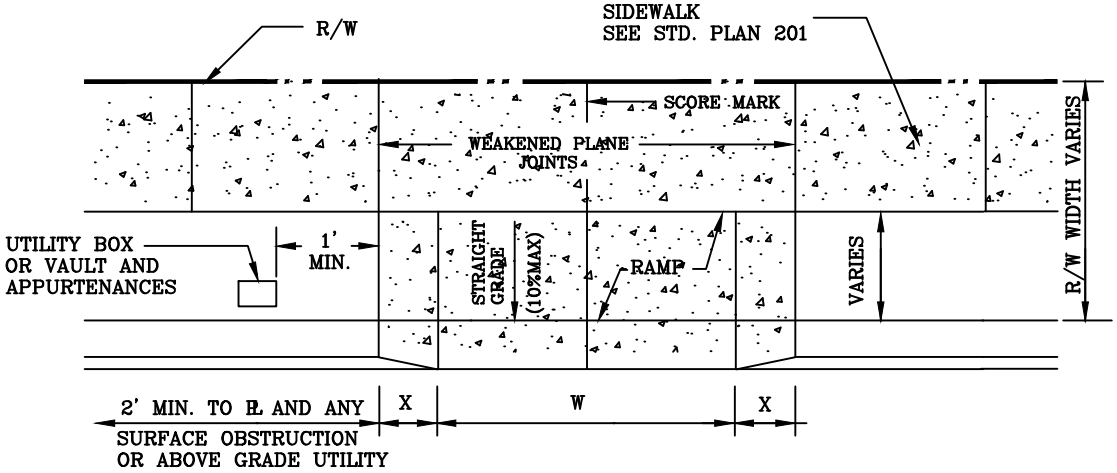

PLAN

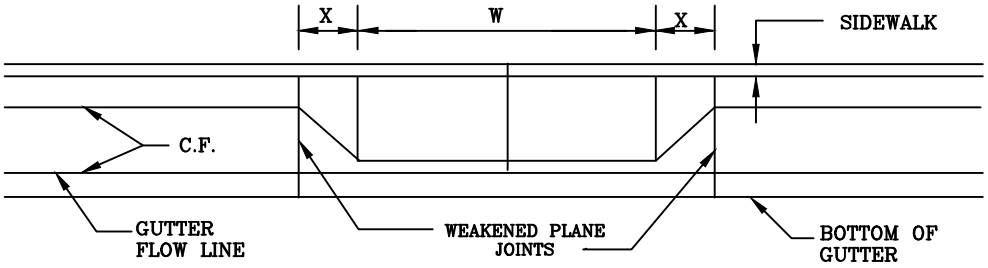

ELEVATION

DRIVEWAYS SERVING	MIN. "W"
RESIDENTIAL 1-2 DWELLING >2 DWELLING	12 FEET 22 FEET*
COMM. & IND. ONE-WAY TWO-WAY	15 FEET* 28 FEET

* W=28 FEET MIN. MAYBE REQUIRED BY O.C.F.A. IN VERY HIGH FIRE SERVERITY ZONES. DRIVEWAY TYPE I SHALL NOT BE USED AT SIGNALIZED DRIVEWAYS. FOR SIGNALIZED INTERSECTIONS SEE STD. PLAN NO. 205 DRIVEWAY TYPE II-A.

NOTE:
1. NO UTILITY BOXES OR VAULT APPURTENANCES SHALL BE PLACED WITHIN THE DRIVEWAY OR WITHIN ONE FOOT OF THE DRIVEWAY.
2. IF SIDEWALK IS LOCATED OUTSIDE OF THE PUBLIC RIGHT OF WAY A SIDEWALK EASEMENT SHALL BE DEDICATED TO THE CITY OF IRVINE. SEE STD. PLAN 201 AND 201A
3. ANY RETROFIT/RECONSTRUCTION OF DRIVEWAYS SHALL MATCH EXISTING NEIGHBORHOOD DRIVEWAY TYPE.

TYPE I-A

DRIVEWAY TYPE I

MARK CARROLL, R.C.E. 31515
CITY OF IRVINE - CITY ENGINEER

AUGUST 2013
DATE

STD. PLAN 204

SHEET 1 OF 4

CROSS SECTION

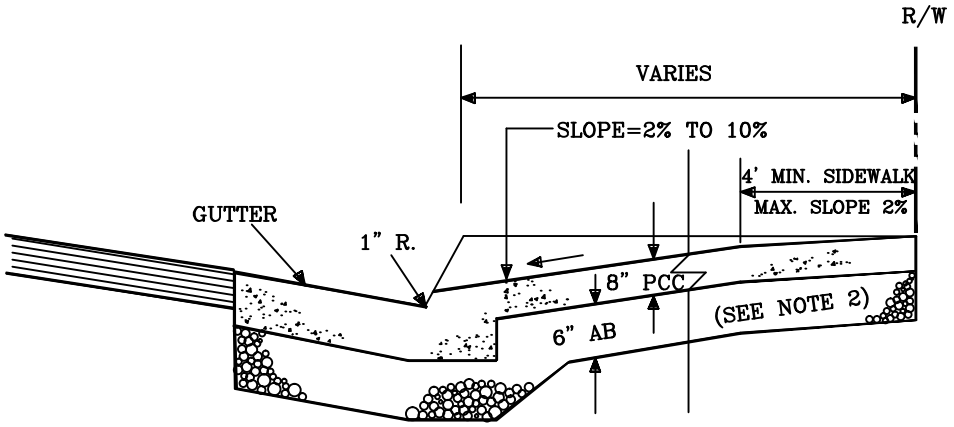

NOTES:
1. UNDER NO CIRCUMSTANCES WILL SAW CUTTING IN THE GUTTER FLOW LINE TO REMOVE THE CURB BE ALLOWED.
2. COMMERCIAL, INDUSTRIAL, AND RESIDENTIAL DRIVEWAYS SERVING 5 OR MORE DWELLING UNITS SHALL HAVE 6 INCHES OF AGGREGATE BASE UNDER GUTTER, CURB RAMP AND SIDEWALK FROM TOP OF "X" TO TOP OF "X".
3. GUTTER, RAMP, AND SIDEWALK THICKNESS "T" SHALL BE 6 INCHES (RESIDENTIAL) OR 8 INCHES (COMMERCIAL/INDUSTRIAL) FROM TOP OF "X" TO TOP OF "X".
4. WEAKENED PLANE JOINTS SHALL BE 2 INCHES DEEP WITH 1/8 INCH RADIUS EDGES, PURSUANT TO SECTION 303-5.4.3 OF THE GREENBOOK. PLASTIC CONTROL JOINTS ARE NOT ALLOWED.
5. COMMERCIAL AND INDUSTRIAL LOCATIONS MAY USE OTHER TYPES OF DRIVEWAYS UPON APPROVAL BY CITY ENGINEER.
6. DRIVEWAY SHALL BE CONSTRUCTED OF PORTLAND CEMENT CONCRETE IN ACCORDANCE WITH STD. PLAN No. 405.
7. DRIVEWAYS WITH "W" LESS THAN 20 FEET SHALL HAVE ONE (1) SCORE MARK AT 1/2 "W". DRIVEWAYS WITH "W" OVER 20 FEET SHALL HAVE SCORE MARKS NOT TO EXCEED 10 FEET ON CENTER.
8. FOR NEW DRIVEWAY CONSTRUCTION ADJACENT TO EXISTING ROADWAYS, 12 INCHES OF ASPHALT FROM THE EDGE OF THE GUTTER ADJACENT TO THE DRIVEWAY SHALL BE REMOVED AND REPLACED.
9. RESIDENTIAL DRIVEWAYS SERVING 4 OR LESS DWELLING UNITS MAY BE PLACED MONOLITHIC WITH CURB AND GUTTER OR MAY BE KEYED OR DOWELED INTO ADJACENT CURB AND GUTTER AND SIDEWALK TO THE SATISFACTION OF THE CITY INSPECTOR. RESIDENTIAL DRIVEWAYS SERVING 5 OR MORE DWELLING UNITS SHALL BE PLACED MONOLITHICALLY.
10. "X" SHALL BE 3-FEET FOR 6-INCH CURBS AND 4-FEET FOR 8-INCH CURBS.
11. ANY RETROFIT/RECONSTRUCTION OF DRIVEWAYS SHALL MATCH EXISTING NEIGHBORHOOD DRIVEWAY TYPE.

DRIVEWAY TYPE I

MARK CARROLL, R.C.E. 31515
CITY OF IRVINE - CITY ENGINEER

AUGUST 2013
DATE

STD. PLAN 204

CITY OF IRVINE
PUBLIC WORKS

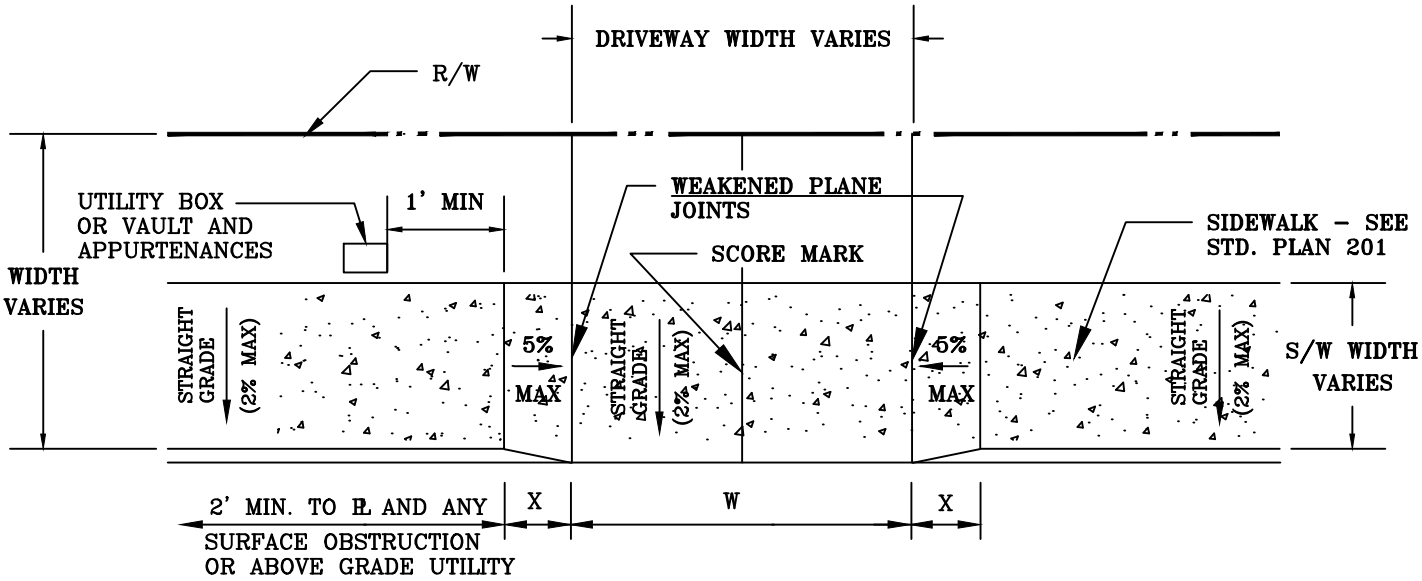

PLAN

DRIVEWAYS SERVING	MIN. "W"
RESIDENTIAL 1–2 DWELLING >2 DWELLING	12 FEET 22 FEET*
COMM. & IND. ONE–WAY TWO–WAY	15 FEET* 28 FEET

* W=28 FEET MIN. MAYBE REQUIRED BY O.C.F.A. IN VERY HIGH FIRE SERVERITY ZONES. DRIVEWAY TYPE I SHALL NOT BE USED AT SIGNALIZED DRIVEWAYS. FOR SIGNALIZED INTERSECTIONS SEE STD. PLAN NO. 205 DRIVEWAY TYPE II–A.

TYPE I–B

DRIVEWAY TYPE I

MARK CARROLL, R.C.E. 31515
CITY OF IRVINE - CITY ENGINEER

AUGUST 2013
DATE

STD. PLAN 204

SHEET 3 OF 4

CITY OF IRVINE
PUBLIC WORKS

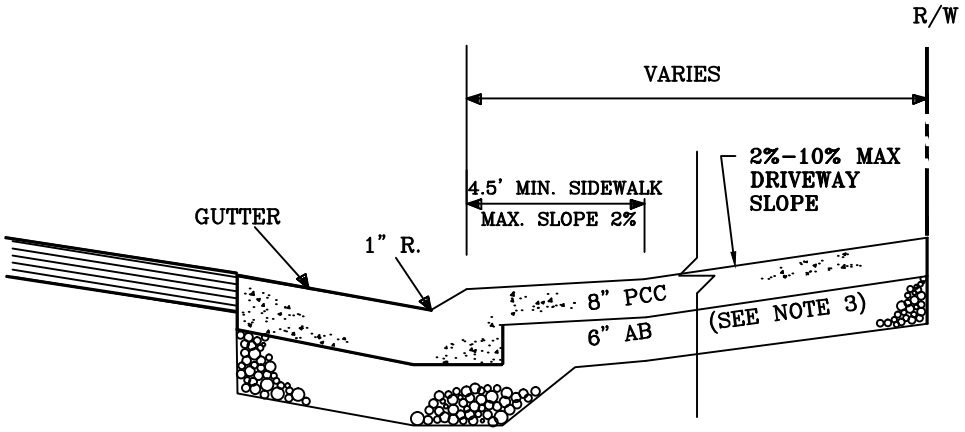

CROSS SECTION

NOTES:
1. NO UTILITY BOXES OR VAULT APPURTENANCES SHALL BE PLACED WITHIN THE DRIVEWAY OR WITHIN ONE FOOT OF THE DRIVEWAY.
2. UNDER NO CIRCUMSTANCES WILL SAW CUTTING IN THE GUTTER FLOW LINE TO REMOVE THE CURB BE ALLOWED.
3. COMMERCIAL, INDUSTRIAL, AND RESIDENTIAL DRIVEWAYS SERVING 5 OR MORE DWELLING UNITS SHALL HAVE 6 INCHES OF AGGREGATE BASE UNDER GUTTER, CURB RAMP AND SIDEWALK FROM TOP OF "X" TO TOP OF "X".
4. GUTTER, RAMP, AND SIDEWALK THICKNESS "T" SHALL BE 6 INCHES (RESIDENTIAL) OR 8 INCHES (COMMERCIAL/INDUSTRIAL) FROM TOP OF "X" TO TOP OF "X".
5. WEAKENED PLANE JOINTS SHALL BE 2 INCHES DEEP WITH 1/8 INCH RADIUS EDGES, PURSUANT TO SECTION 303-5.4.3 OF THE GREENBOOK. PLASTIC CONTROL JOINTS ARE NOT ALLOWED.
6. COMMERCIAL AND INDUSTRIAL LOCATIONS MAY USE OTHER TYPES OF DRIVEWAYS UPON APPROVAL BY CITY ENGINEER.
7. DRIVEWAY SHALL BE CONSTRUCTED OF PORTLAND CEMENT CONCRETE IN ACCORDANCE WITH STD. PLAN No. 405.
8. DRIVEWAYS WITH "W" LESS THAN 20 FEET SHALL HAVE ONE (1) SCORE MARK AT 1/2 "W". DRIVEWAYS WITH "W" OVER 20 FEET SHALL HAVE SCORE MARKS NOT TO EXCEED 10 FEET ON CENTER.
9. FOR NEW DRIVEWAY CONSTRUCTION ADJACENT TO EXISTING ROADWAYS, 12 INCHES OF ASPHALT FROM THE EDGE OF THE GUTTER ADJACENT TO THE DRIVEWAY SHALL BE REMOVED AND REPLACED.
10. RESIDENTIAL DRIVEWAYS SERVING 4 OR LESS DWELLING UNITS MAY BE PLACED MONOLITHIC WITH CURB AND GUTTER OR MAY BE KEYED OR DOWELED INTO ADJACENT CURB AND GUTTER AND SIDEWALK TO THE SATISFACTION OF THE CITY INSPECTOR. RESIDENTIAL DRIVEWAYS SERVING 5 OR MORE DWELLING UNITS SHALL BE PLACED MONOLITHICALLY.
11. "X" SHALL BE 8.5-FEET FOR 6-INCH CURBS AND 12-FEET FOR 8-INCH CURBS.
12. ANY RETROFIT/RECONSTRUCTION OF DRIVEWAYS SHALL MATCH EXISTING NEIGHBORHOOD DRIVEWAY TYPE.

DRIVEWAY TYPE I

MARK CARROLL, R.C.E. 31515
CITY OF IRVINE - CITY ENGINEER

AUGUST 2013
DATE

STD. PLAN 204

CITY OF IRVINE
PUBLIC WORKS

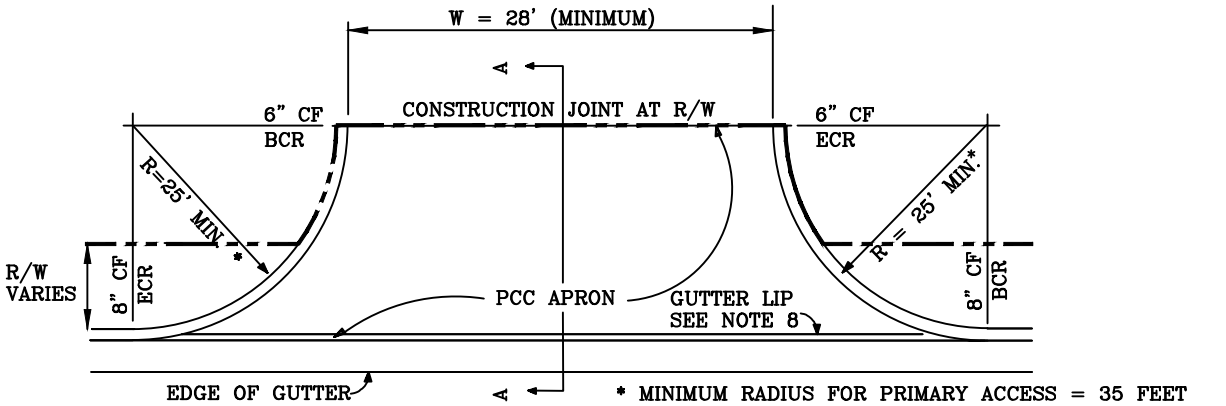

* MINIMUM RADIUS FOR PRIMARY ACCESS = 35 FEET
MINIMUM RADIUS FOR SECONDARY ACCESS = 25 FEET
ALONG ARTERIAL HIGHWAYS

PLAN

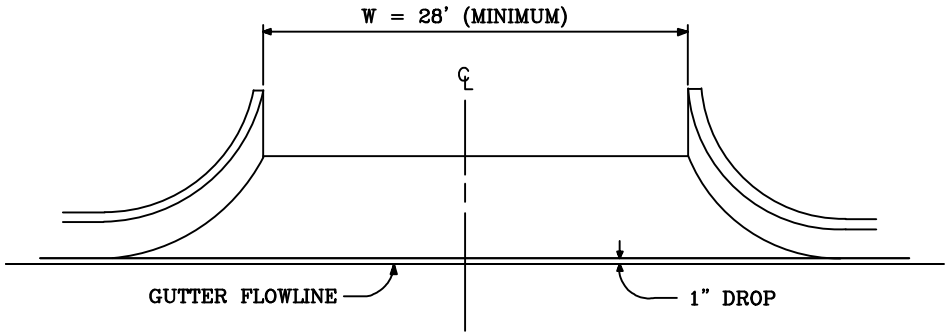

ELEVATION

NOTE:

1. TYPE II–A DRIVEWAYS ARE FOR MULTI–DWELLING RESIDENTIAL UNITS, COMMERCIAL, INDUSTRIAL, AND INSTITUTIONAL USE ONLY WITH APPROVAL OF THE CITY ENGINEER.
2. ACCESS RAMPS MEETING ADA AND TITLE 24 SHALL BE LOCATED WITHIN DRIVEWAY RADIUS RETURNS. SEE STANDARD PLAN 202.
3. IF SIDEWALK IS LOCATED OUTSIDE OF THE PUBLIC RIGHT OF WAY A SIDEWALK EASEMENT SHALL BE DEDICATED TO THE CITY OF IRVINE.
4. RADIUS OF CURB RETURNS SHALL BE SYMMETRICAL.
5. NO UTILITY BOXES OR VAULT APPEARANCES SHALL BE PLACED WITHIN THE DRIVEWAY, ACCESS RAMP, OR WITHIN ONE FOOT OF BACK OF DRIVEWAY CURB.
6. ABOVE GRADE OBSTRUCTIONS OR UTILITIES SHALL NOT BE LOCATED WITHIN ACCESS RAMP AND SHALL BE MINIMUM OF TWO FEET FROM THE BACK OF DRIVEWAY CURB.
7. FOR SIGNALIZED INTERSECTIONS, THE GUTTER LIP WILL BE REMOVED FROM THE DRIVEWAY AND CATCH BASINS WILL BE REQUIRED FOR DRAINAGE.
8. ANY RETROFIT/RECONSTRUCTION OF DRIVEWAYS SHALL MATCH EXISTING NEIGHBORHOOD DRIVEWAY TYPE.

TYPE II–A

DRIVEWAY TYPE II

MARK CARROLL, R.C.E. 31515
CITY OF IRVINE - CITY ENGINEER

AUGUST 2013
DATE

STD. PLAN 205

SHEET 1 OF 3

CITY OF IRVINE
PUBLIC WORKS

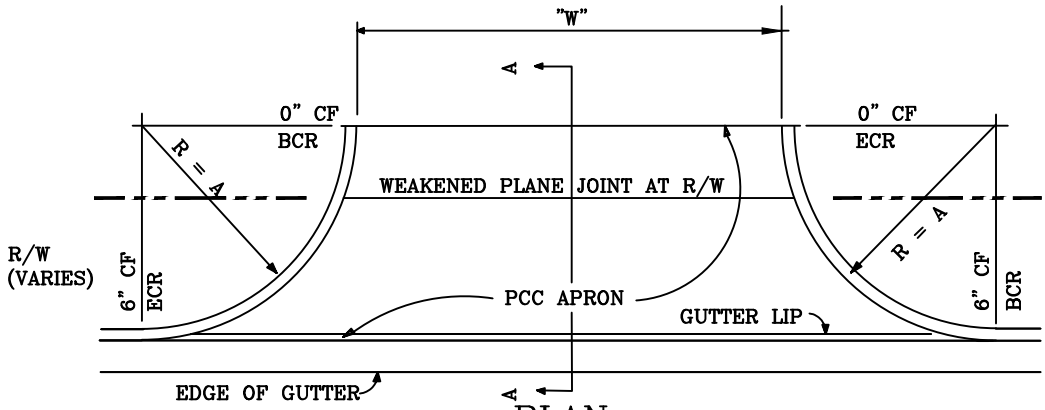

PLAN

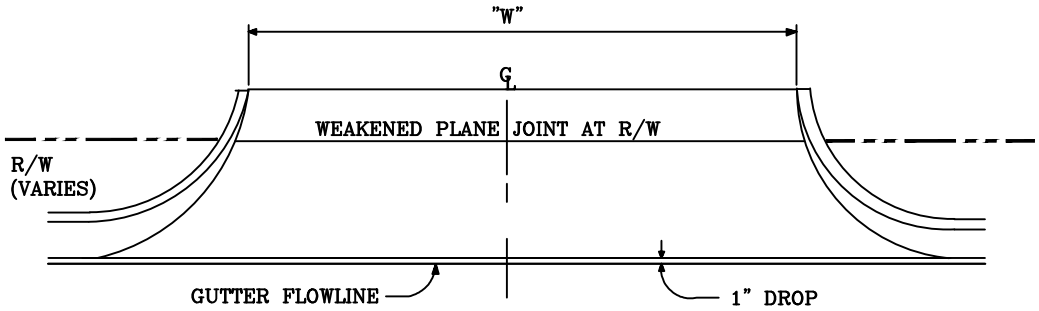

ELEVATION

RESIDENTIAL DRIVEWAY FROM	MIN. "W"	MIN. "A"
PRIVATE COURT	12 FEET	3 FEET
LOCAL STREET/ PRIVATE WAY	12 FEET	5 FEET

PRIVATE COURT DRIVEWAY FROM	MIN. "W"	MIN. "A"
PRIVATE WAY(4,5)	22 FEET	5 FEET
LOCAL STREET (4,5)	24 FEET	5 FEET

* DRIVEWAY TYPE II-B SHALL BE NOT BE USED AT SIGNALIZED DRIVEWAYS. FOR SIGNALIZED INTERSECTIONS SEE STD. PLAN NO. 205 DRIVEWAY TYPE II-A.

NOTE:
1. TYPE II-B DRIVEWAY CAN BE USED FOR SINGLE FAMILY RESIDENTIAL USE ONLY WITH APPROVAL OF CITY ENGINEER.
2. AN EASEMENT SHALL BE REQUIRED FOR HANDICAP RAMPS OUTSIDE OF THE RIGHT OF WAY.
3. RADIUS OF CURB REUTRNS SHALL BE SYMMETRICAL.
4. W = 26 MIN. FOR RESIDENTIAL DRIVEWAY SERVICING 9 OR MORE DWELLING UNITS.
5. W = 28 FEET MIN. IF REQUIRED BY ORANGE COUNTY FIRE AUTHORITY (OCFA) IN VERY HIGH FIRE SEVERITY ZONE.
6. IF SIDEWALK IS LOCATED OUTSIDE OF THE PUBLIC RIGHT OF WAY A SIDEWALK EASEMENT SHALL BE DEDICATED TO THE CITY OF IRVINE. SEE STANDARD PLAN 201 AND 201A.
7. ANY RETROFIT/RECONSTRUCTION OF DRIVEWAYS SHALL MATCH EXISTING NEIGHBORHOOD DRIVEWAY TYPE.

TYPE II-B

DRIVEWAY TYPE II

MARK CARROLL, R.C.E. 31515
CITY OF IRVINE - CITY ENGINEER

AUGUST 2013
DATE

STD. PLAN 205

CROSS SECTION

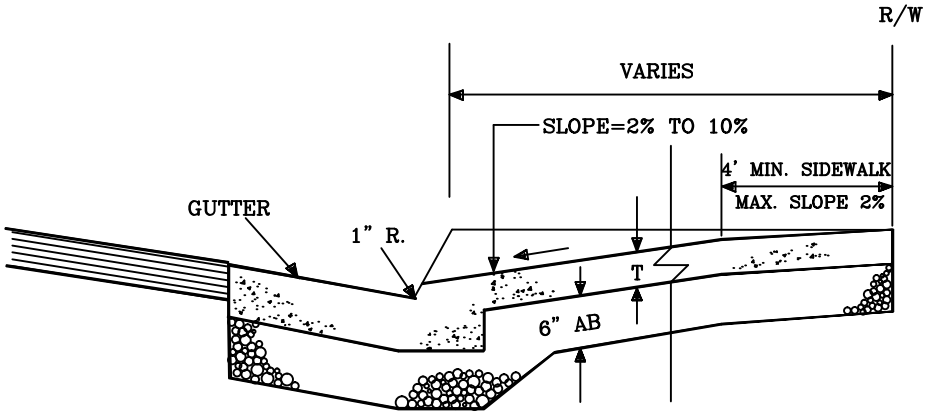

SECTION A–A

T= 6"(RESIDENTIAL) AND 8"(COMMERCIAL/INDUSTRIAL)

NOTE:
1. UNDER NO CIRCUMSTANCES WILL SAW CUTTING IN THE GUTTER FLOW LINE TO REMOVE THE CURB BE ALLOWED.
2. 6 INCHES OF BASE MATERIAL IS REQUIRED UNDER THE GUTTER AND RAMP TO THE R/W LINE.
3. GUTTER AND RAMP THICKNESS SHALL BE 6 INCHES (RESIDENTIAL) OR 8 INCHES (COMMERCIAL/INDUSTRIAL) TO THE R/W LINE.
4. RAMP AND BASE THICKNESS REQUIREMENTS OUTSIDE OF THE R/W SHALL BE IN 4. ACCORDANCE WITH THE APPROVED SOILS ENGINEER'S RECOMMENDATIONS.
5. WEAKENED PLANE JOINTS SHALL BE 2 INCHES DEEP WITH 1/8 INCH RADIUS EDGES. PURSUANT TO SECTION 303–5.4.3 OF THE GREENBOOK. PLASTIC CONTROL JOINTS ARE NOT ALLOWED.
6. DRIVEWAY APRON SHALL BE CONSTRUCTED OF PORTLAND CEMENT CONCRETE IN ACCORDANCE WITH STD PLAN No.405.
7. DRIVEWAY SHALL HAVE SCORE MARKS NOT TO EXCEED 10 FEET ON CENTER.
8. FOR NEW DRIVEWAY CONSTRUCTION ON EXISTING ROADWAYS, 12 INCHES OF ASPHALT FROM THE 8 EDGE OF THE GUTTER SHALL BE REMOVED.
9. ACCESS RAMPS SHALL COMPLY WITH TITLE 24 AND ADA REQUIREMENTS.
10. CURB & GUTTER AND RAMP SHALL NOT BE MONOLITHIC.
11. FULL HEIGHT OF CURB SHALL CONTINUE ON–SITE FROM THE ENDS OF THE DRIVEWAY CURB RETURNS.
12. ANY RETROFIT/RECONSTRUCTION OF DRIVEWAYS SHALL MATCH EXISTING NEIGHBORHOOD DRIVEWAY TYPE.

DRIVEWAY TYPE II

MARK CARROLL, R.C.E. 31515
CITY OF IRVINE - CITY ENGINEER

AUGUST 2013
DATE

STD. PLAN 205

CITY OF IRVINE
PUBLIC WORKS

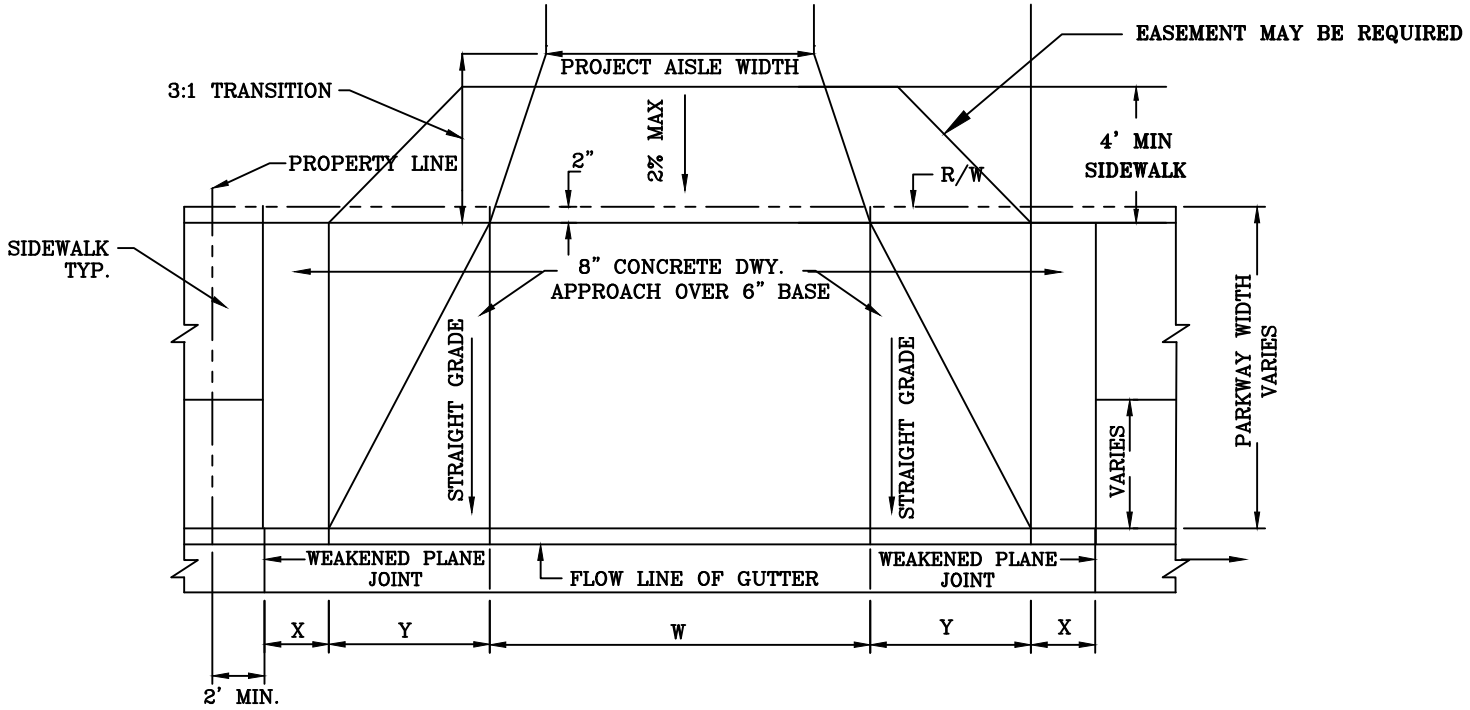

"X" VALUES	TYPE "A-2" CURB	TYPE "D" CURB
SIDEWALK ADJACENT TO R/W	3'	3'
SIDEWALK ADJACENT TO CURB	4'	3'
SIDEWALK FULL PARKWAY	4'	3'

"W" VALUES		
LIMITS	MIN.	MAX.
ONE-WAY	14' *	16' *
TWO-WAY	28'	34'

* "W" =28' MIN. MAYBE REQUIRED BY O.C.F.A. IN VERY HIGH SERVERITY ZONES.

"Y" VALUES *	
8' PARKWAY	8'
9' PARKWAY	9'
10' PARKWAY	10'

* "Y" MAY BE REDUCED AS APPROVED BY CITY ENGINEER.

* STANDARD PLAN 206 DRIVEWAY TYPE SHALL NOT BE USED AT SIGNALIZED DRIVEWAYS. FOR SIGNALIZED INTERSECTIONS SEE STD. PLAN NO. 205 DRIVEWAY TYPE II-A.

NOTE:
1. FLARED DRIVEWAY APPROACH SHALL BE USED FOR MULTI-FAMILY DEVELOPMENTS WITH 120 OR MORE TRIPS PER DAY.
2. NO UTILITY BOXES OR VAULT APPURTENANCES SHALL BE PLACED WITHIN THE DRIVEWAY OR WITHIN ONE FOOT OF THE DRIVEWAY.
3. IF SIDEWALK IS LOCATED OUTSIDE OF THE PUBLIC RIGHT OF WAY A SIDEWALK EASEMENT SHALL BE DEDICATED TO THE CITY OF IRVINE. SEE STD. PLAN. 201 AND 201A.
4. ABOVE GRADE OBSTRUCTIONS OR UTILITIES SHALL BE PLACED WITHIN 2 FEET FROM THE TOP OF "X".
5. ANY RETROFIT/RECONSTRUCTION OF DRIVEWAYS SHALL MATCH EXISTING NEIGHBORHOOD DRIVEWAY TYPE.

DRIVEWAY TYPE III

MARK CARROLL, R.C.E. 31515
CITY OF IRVINE - CITY ENGINEER

AUGUST 2013
DATE

STD. PLAN 206

CITY OF IRVINE
PUBLIC WORKS

CROSS SECTION

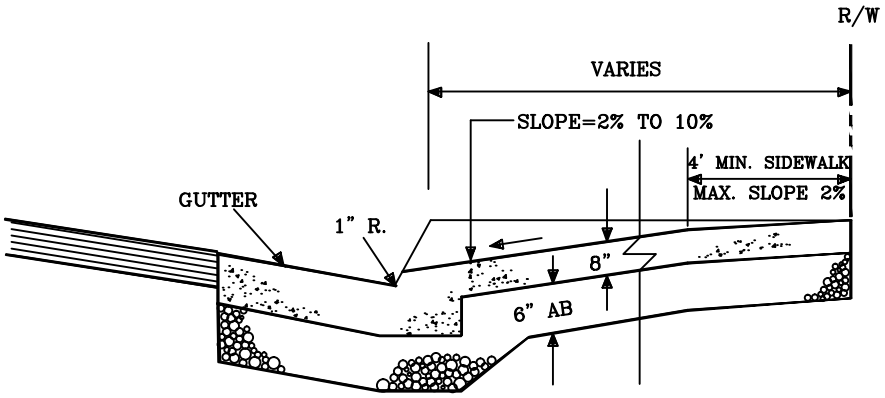

NOTES:
1. UNDER NO CIRCUMSTANCES WILL SAW CUTTING IN THE GUTTER FLOW LINE TO REMOVE CURB BE ALLOWED.
2. 6 INCHES OF AGGREGATE BASE UNDER GUTTER, CURB RAMP AND SIDEWALK FROM TOP OF "X" TO TOP OF "X" WITHIN RIGHT OF WAY.
3. RAMP AND BASE THICKNESS OUTSIDE THE RIGHT OF WAY SHALL BE IN ACCORDANCE WITH THE APPROVED ENGINEER'S RECOMMENDATION.
4. GUTTER, RAMP, AND SIDEWALK THICKNESS SHALL BE 8 INCHES FROM TOP OF "X" TO TOP OF "X" WITHIN PUBLIC RIGHT OF WAY.
5. WEAKENED PLANE JOINTS SHALL BE 2 INCHES DEEP WITH 1/8 INCH RADIUS EDGES, PURSUANT TO SECTION 303-5.4.3 OF THE GREENBOOK. PLASTIC CONTROL POINTS ARE NOT ALLOWED.
6. DRIVEWAY SHALL BE CONSTRUCTED OF PORTLAND CEMENT CONCRETE IN ACCORDANCE WITH STD. PLAN No. 405.
7. 12" OF ASPHALT FROM THE EDGE OF THE GUTTER SHALL BE REMOVED ON EXISTING STREETS WHEN CONSTRUCTING A NEW DRIVEWAY ACCESS.
8. ALL CURBS AND GUTTER SHALL BE CONSTRUCTED IN ACCORDANCE WITH STD. PLAN 200.
9. CURING COMPOUND SHALL BE REQUIRED IN ACCORDANCE WITH STANDARD SPECIFICATIONS FOR PUBLIC WORKS CONSTRUCTION.
10. DRIVEWAYS WITH A "W" LESS THAN 20' SHALL HAVE ONE SCORE MARK AT "W/2". DRIVEWAYS WITH A "W" OVER 20' SHALL HAVE SCORE MARKS NOT TO EXCEED 10' ON CENTERS.
11. ANY RETROFIT/RECONSTRUCTION OF DRIVEWAYS SHALL MATCH EXISTING NEIGHBORHOOD DRIVEWAY TYPE.

DRIVEWAY TYPE III

MARK CARROLL, R.C.E. 31515
CITY OF IRVINE - CITY ENGINEER

AUGUST 2013
DATE

STD. PLAN 206

SHEET 2 OF 2

CITY OF IRVINE
PUBLIC WORKS

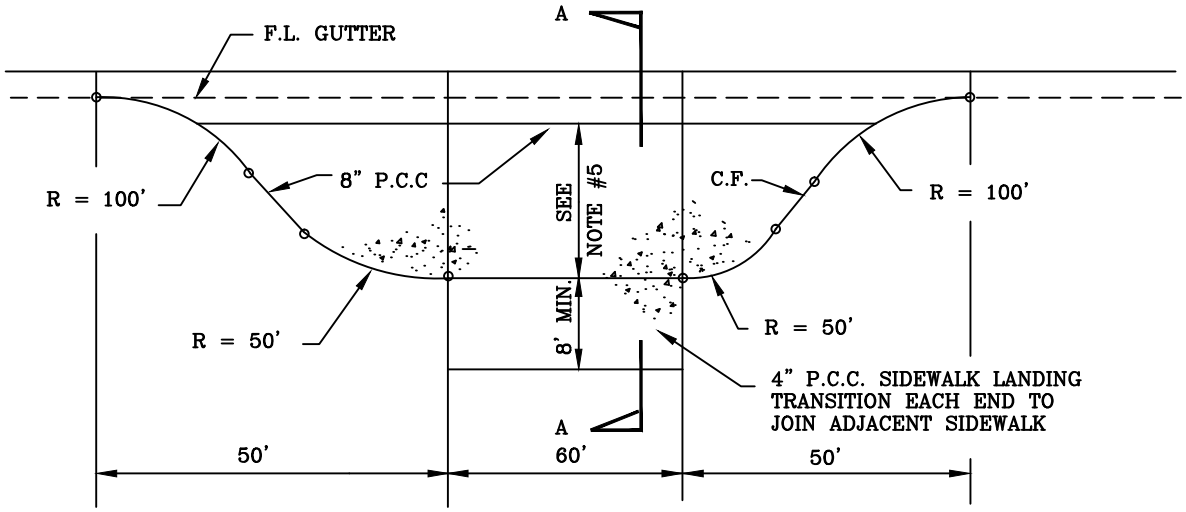

PLAN

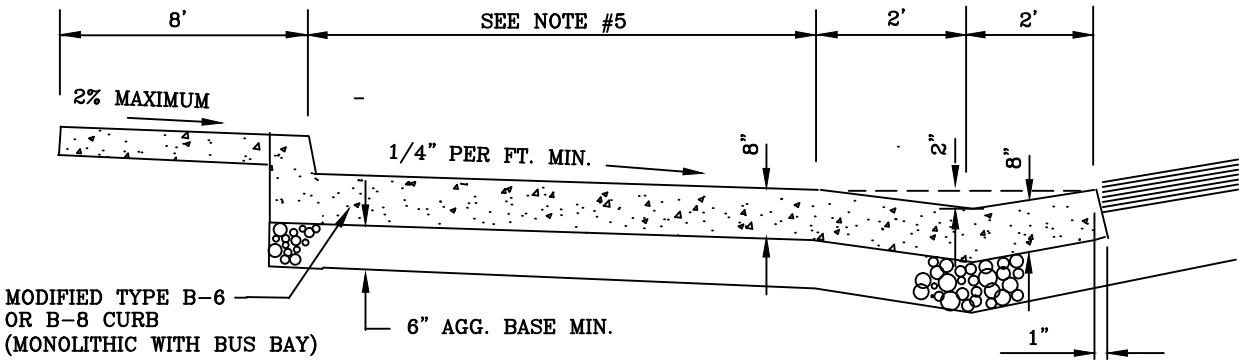

SECTION 'A-A'

NOTES:

1. BUS STOP TURNOUT TO BE USED ONLY AT LOCATIONS APPROVED BY THE CITY ENGINEER.
2. CURB, BUS BAY, AND V-GUTTER TO BE PLACED MONOLITHICALLY.
3. SEE STD. PLAN NO. 201 FOR SIDEWALK DETAILS.
4. PRE-EMERGE WEEDKILLER MUST BE APPLIED PRIOR TO CONSTRUCTION OF P.C.C FLATWORK.
5. MINIMUM 4 FEET IF BIKE LANE IS 7 FEET OR GREATER. MINIMUM 6 FEET IF BIKE LANE IS LESS THAN 7 FEET. ADDITIONAL DEPTH MAY BE REQUIRED IF THERE IS NO BIKE LANE.
6. CURB, BUS BAY, AND V-GUTTER SHALL BE CONSTRUCTED OF PORTLAND CEMENT CONCRETE IN ACCORDANCE WITH STD. PLAN NO. 405.
7. CURING COMPOUND IS REQUIRED IN ACCORDANCE WITH STANDARD SPECIFICATIONS FOR PUBLIC WORKS CONSTRUCTION.

BUS STOP TURNOUT

MARK CARROLL, R.C.E. 31515
CITY OF IRVINE - CITY ENGINEER

AUGUST 2013
DATE

STD. PLAN 209

SHEET 1 OF 1

CITY OF IRVINE
PUBLIC WORKS

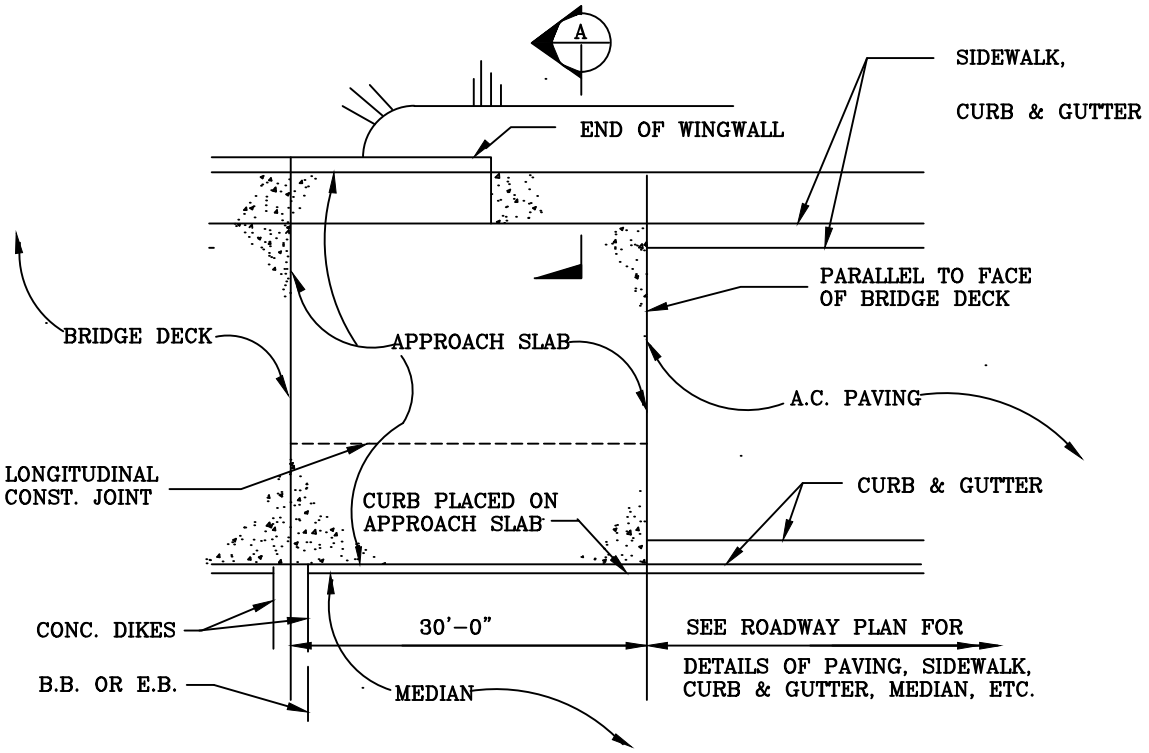

PLAN

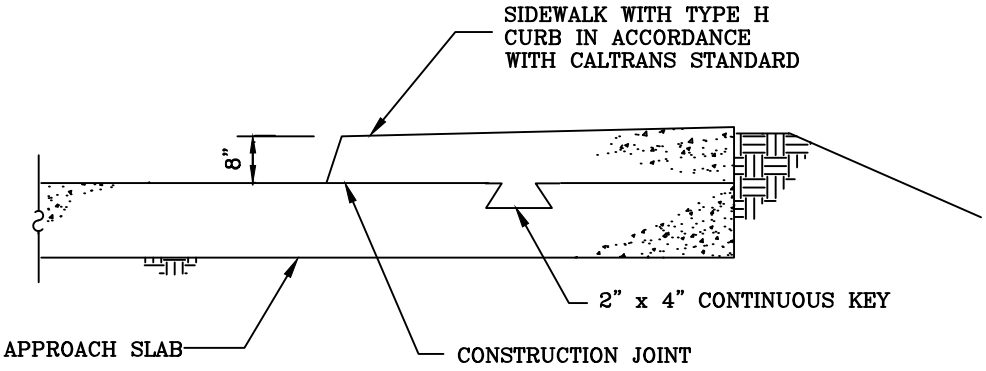

SECTION A

NOTES:
1. NO LONGITUDINAL CONSTRUCTION JOINTS SHALL BE PLACED IN THE FLOW LINE.
2. LONGITUDINAL CONSTRUCTION JOINTS SHOULD COINCIDE WITH THE LANE LINES.

BRIDGE SIDEWALK/APPROACH SLAB

MARK CARROLL, R.C.E. 31515
CITY OF IRVINE - CITY ENGINEER

AUGUST 2013
DATE

STD. PLAN
211
SHEET 1 OF 1

CITY OF IRVINE
PUBLIC WORKS

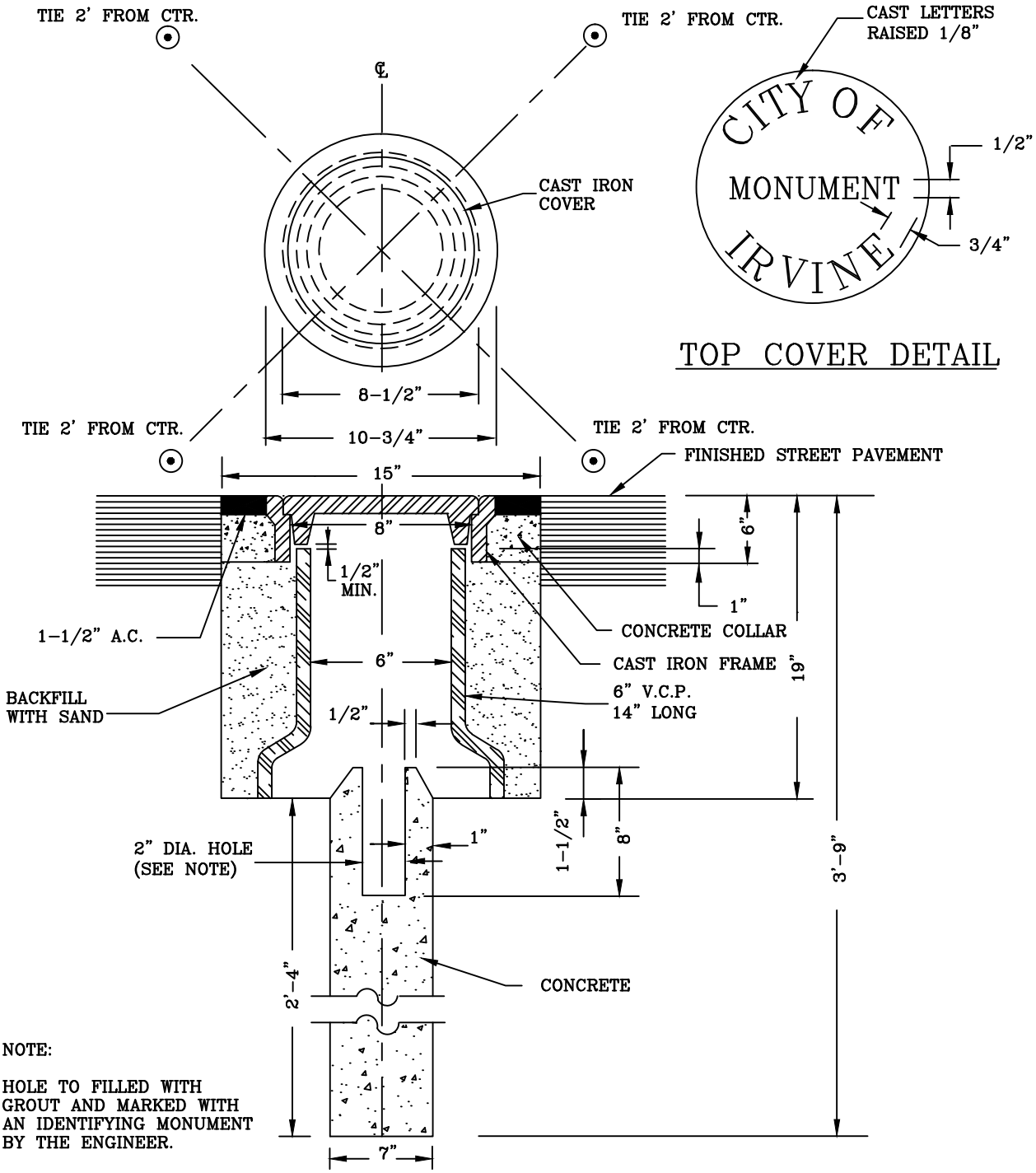

NOTE:

HOLE TO FILLED WITH GROUT AND MARKED WITH AN IDENTIFYING MONUMENT BY THE ENGINEER.

SURVEY MONUMENT

MARK CARROLL, R.C.E. 31515
CITY OF IRVINE - CITY ENGINEER

AUGUST 2013
DATE

STD. PLAN 214

SHEET 1 OF 1

CITY OF IRVINE

PUBLIC WORKS

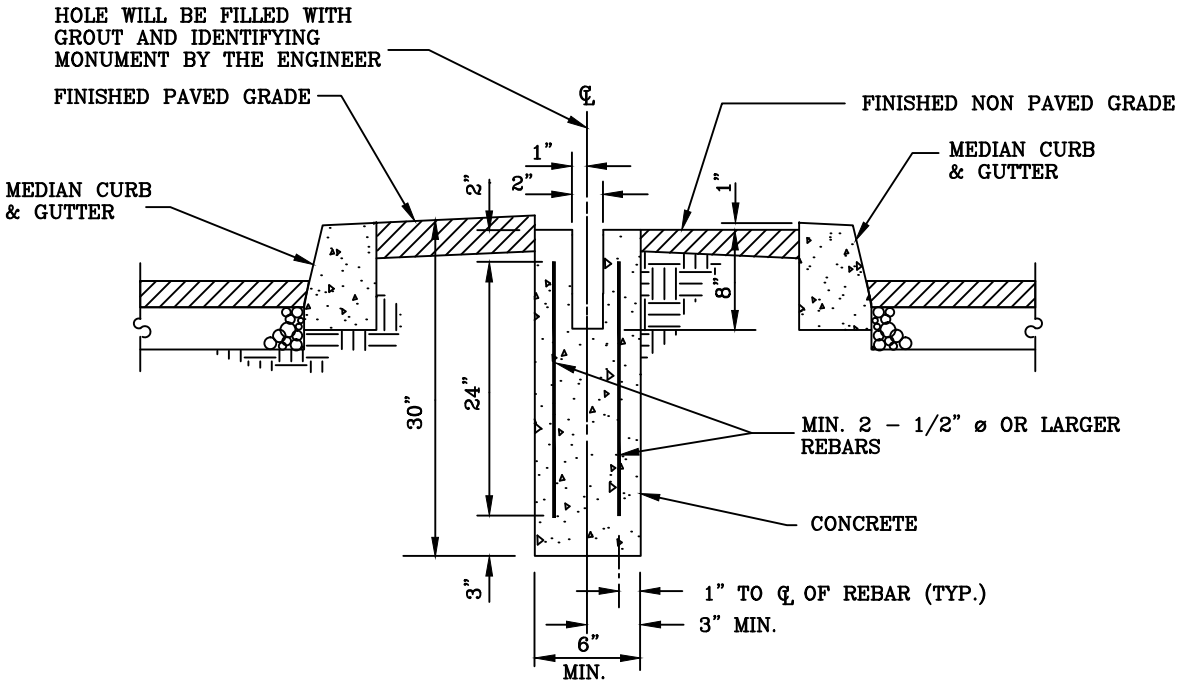

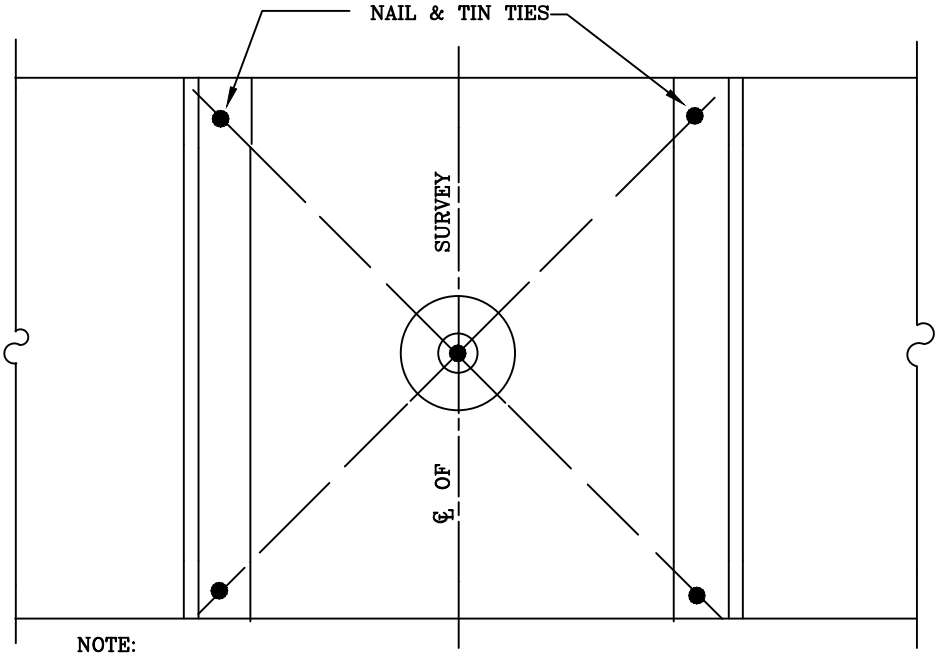

NOTE:
1. THIS TYPE OF MARKER TO BE INSTALLED ONLY IN RAISED MEDIANS.

SURVEY MONUMENT (RAISED MEDIANS)

MARK CARROLL, R.C.E. 31515
CITY OF IRVINE - CITY ENGINEER

AUGUST 2013
DATE

STD. PLAN
214A

SHEET 1 OF 1

CITY OF IRVINE
PUBLIC WORKS

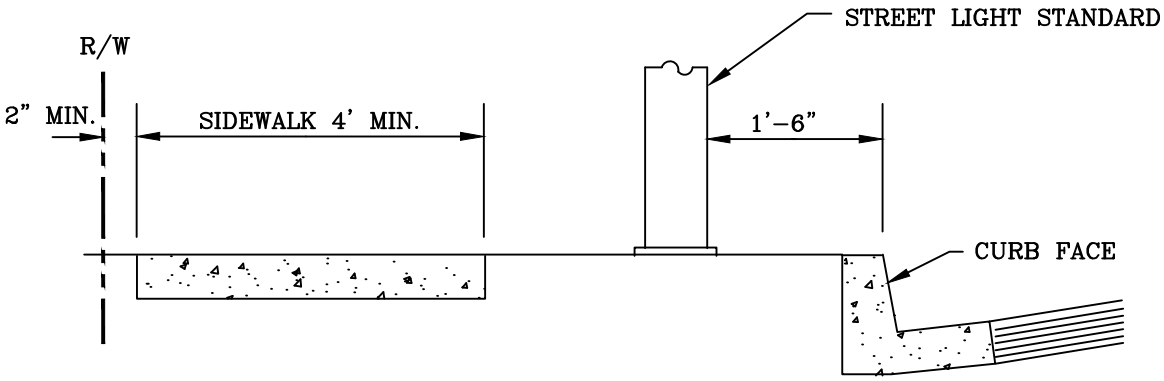

CASE I

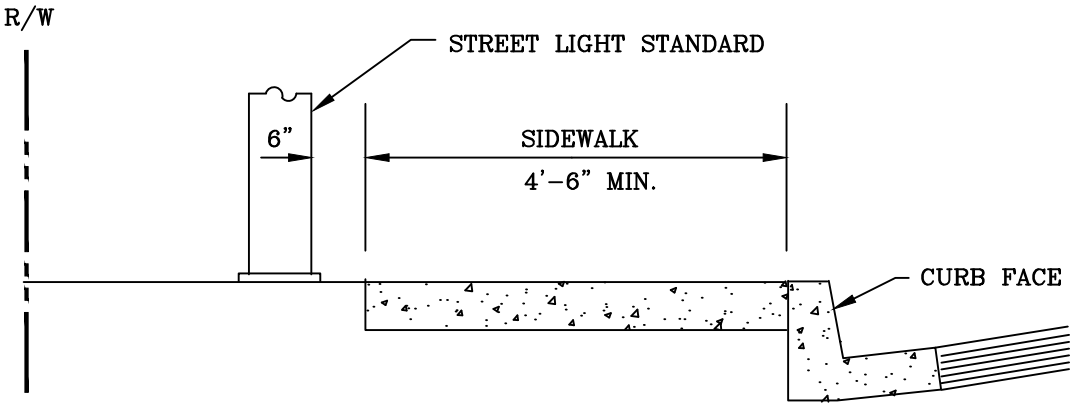

CASE II

NOTE:

1. SEE CITY STANDARD DESIGN MANUAL, SECTION 103, FOR STREET LIGHTING DESIGN INFORMATION.

STREET LIGHTS (PARKWAY)

MARK CARROLL, R.C.E. 31515
CITY OF IRVINE - CITY ENGINEER

AUGUST 2013
DATE

STD. PLAN 215

SHEET 1 OF 1

CITY OF IRVINE

PUBLIC WORKS

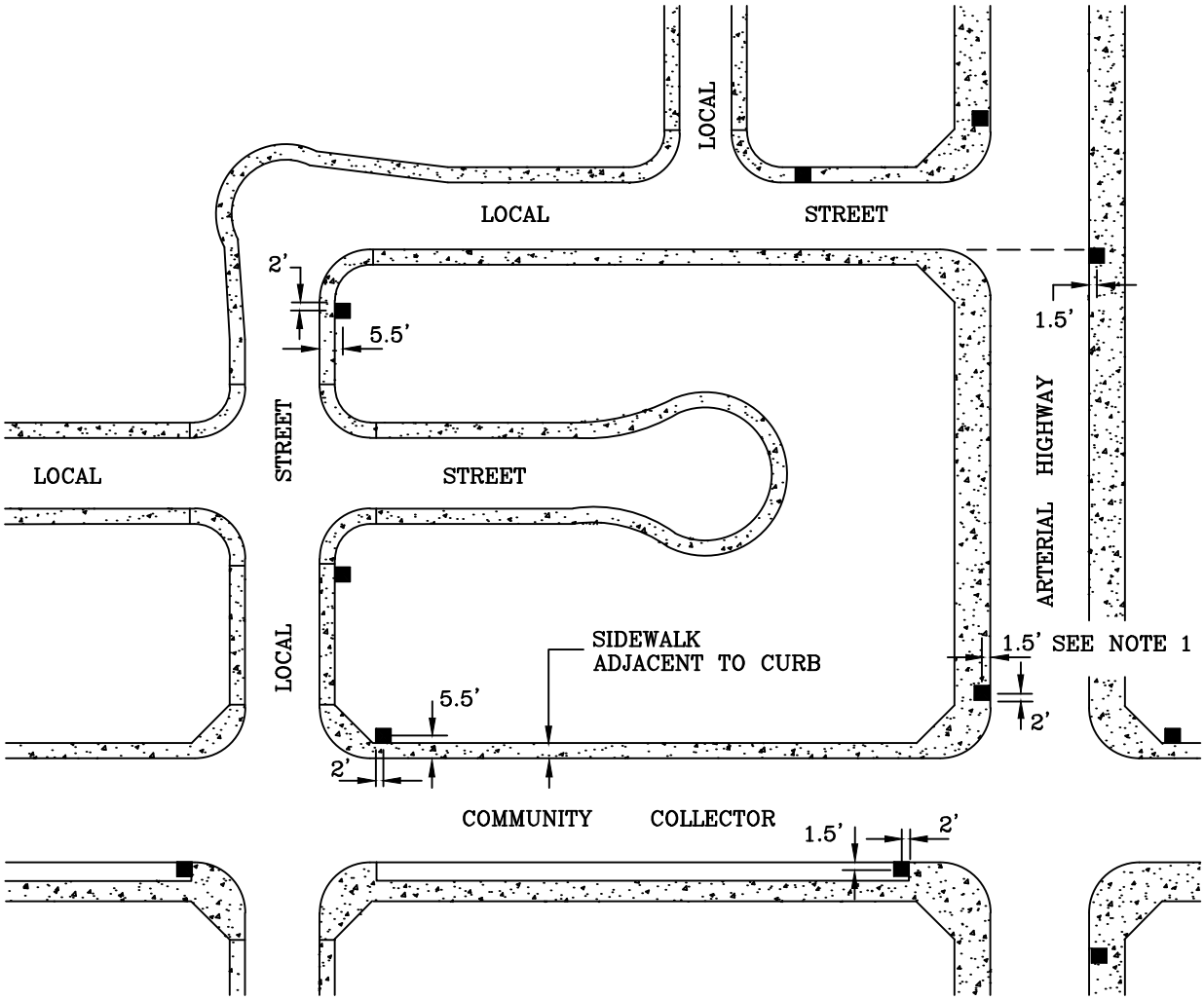

NOTES:

1. ALL STREET NAME SIGNS SHALL BE LOCATED IN ACCORDANCE WITH STANDARD PLAN NO. 218, SIGN SHALL BE 2 FEET FROM B.C.R.
2. STREET NAME SIGNS SHALL BE PLACED AT THE NEAR RIGHT APPROACH OF MAJOR TRAFFIC FLOW.
3. IF OTHER AUXILARY POSTS ARE LOCATED WITHIN 8 FEET OF WHERE SIGNS ARE SHOWN, STREET NAME SIGNS SHALL BE BANDED TO AUXILARY POST.

STREET NAME SIGNS - LOCATION

MARK CARROLL, R.C.E. 31515
CITY OF IRVINE - CITY ENGINEER

AUGUST 2013
DATE

STD. PLAN
216

SHEET 1 OF 1

CITY OF IRVINE
PUBLIC WORKS

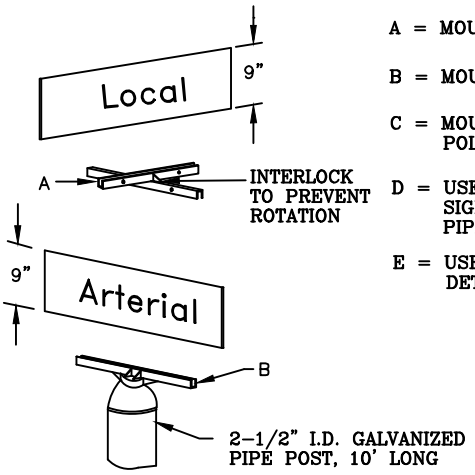

MOUNTING DETAIL

A = MOUNTING BRACKET CROSS PIECE FOR FLAT BLADE SIGN, USE #812F90X OR APPROVED EQUAL.

B = MOUNTING BRACKET POST CAP FOR FLAT BLADE SIGN PIPE POST, USE #812F2R OR APPROVED EQUAL.

C = MOUNTING BRACKET FOR FLAT BLADE SIGN ONTO STREET LIGHT OR POLE, USE #1010 CANTILEVER ARM SUPPORT (NOT SHOWN).

D = USE 2 1/2 INCH I.D. X 10 FEET GALVANIZED PIPE POST FOR STREET NAME SIGN(S) INSTALLATION AND USE 2 1/2 INCH I.D. X 12 FEET GALVANIZED PIPE POST FOR STREET NAME SIGN(S) & R1 SIGN INSTALLATION.

E = USE CONCRETE FOOTING TO SECURE PIPE POST INTO GROUND (SEE FOOTING DETAIL).

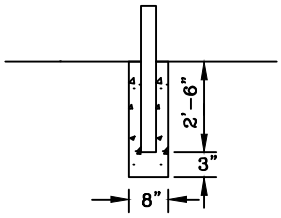

FOOTING DETAIL

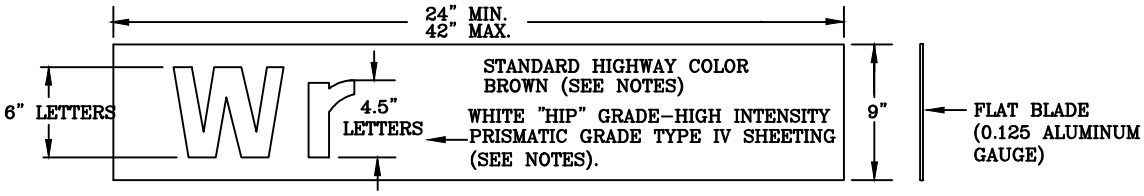

NOTES:
1. ALUMINUM ALLOY FOR ALL COMPONENTS SHALL CONFORM TO SPECIFICATIONS PUBLISHED BY THE ALUMINUM ASSOCIATION
2. THE 9 INCH SIGN SHALL BE USED FOR ARTERIAL AND LOCAL STREET TRAFFIC
3. SIGN BLANK BACKGROUND SHEETED WITH WHITE HIGH INTENSITY PRISMATIC GRADE TYPE IV SHEETING 3M BRAND #3930 OR APPROVED EQUAL
4. COPY SHEETED WITH ELECTRIC CUT LETTER FILM WITH STANDARD HIGHWAY SPEC "BROWN" 3M BRAND #1179 OR APPROVED EQUAL. LETTERS ARE A SERIES "C"

STREET NAME SIGN DETAIL

MARK CARROLL, R.C.E. 31515
CITY OF IRVINE - CITY ENGINEER

AUGUST 2013
DATE

STD. PLAN 216A

SHEET 1 OF 1

CITY OF IRVINE
PUBLIC WORKS

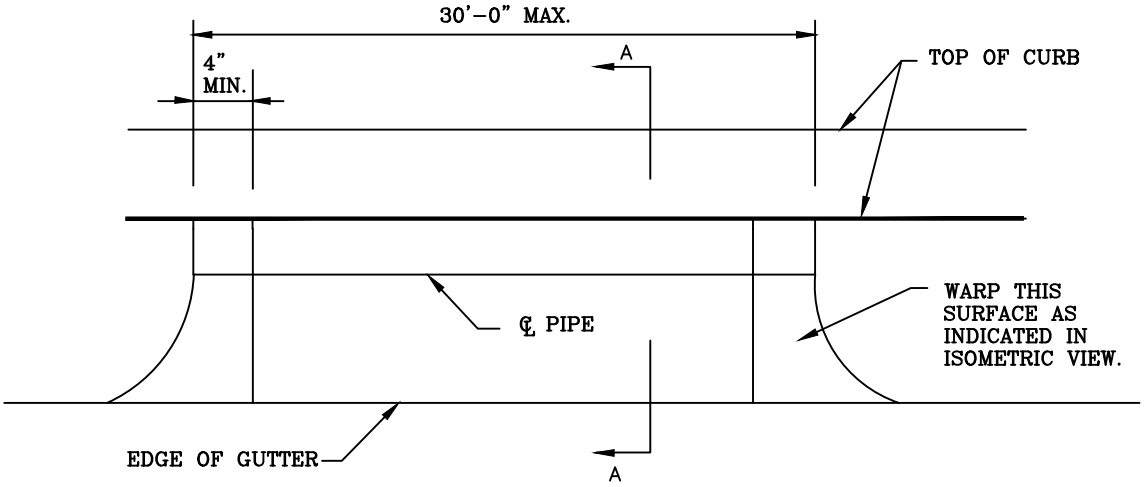

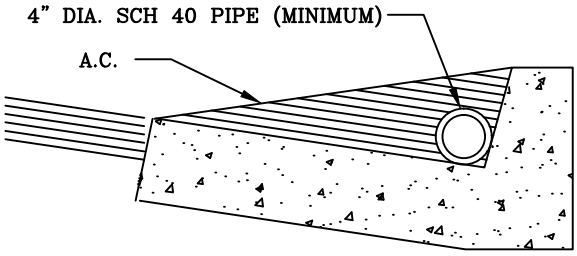

SECTION A-A

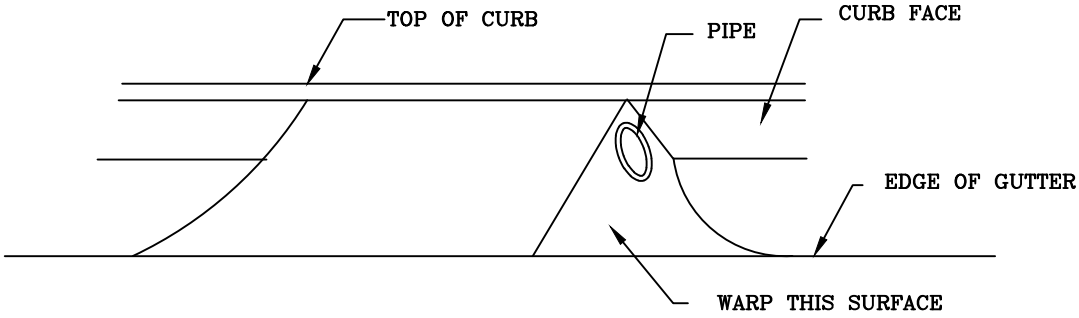

ISOMETRIC

NOTES:

1. AN ENCROACHMENT PERMIT IS REQUIRED.
2. PAINT AND MAINTAIN WITH WHITE REFLECTIVE PAINT (CODIT OR EQUIV.)
3. RAMP SHALL NOT EXTEND BEYOND LIP OF GUTTER.

TEMPORARY ACCESS RAMP

MARK CARROLL, R.C.E. 31515
CITY OF IRVINE - CITY ENGINEER

AUGUST 2013
DATE

STD. PLAN 217

SHEET 1 OF 1

CITY OF IRVINE
PUBLIC WORKS

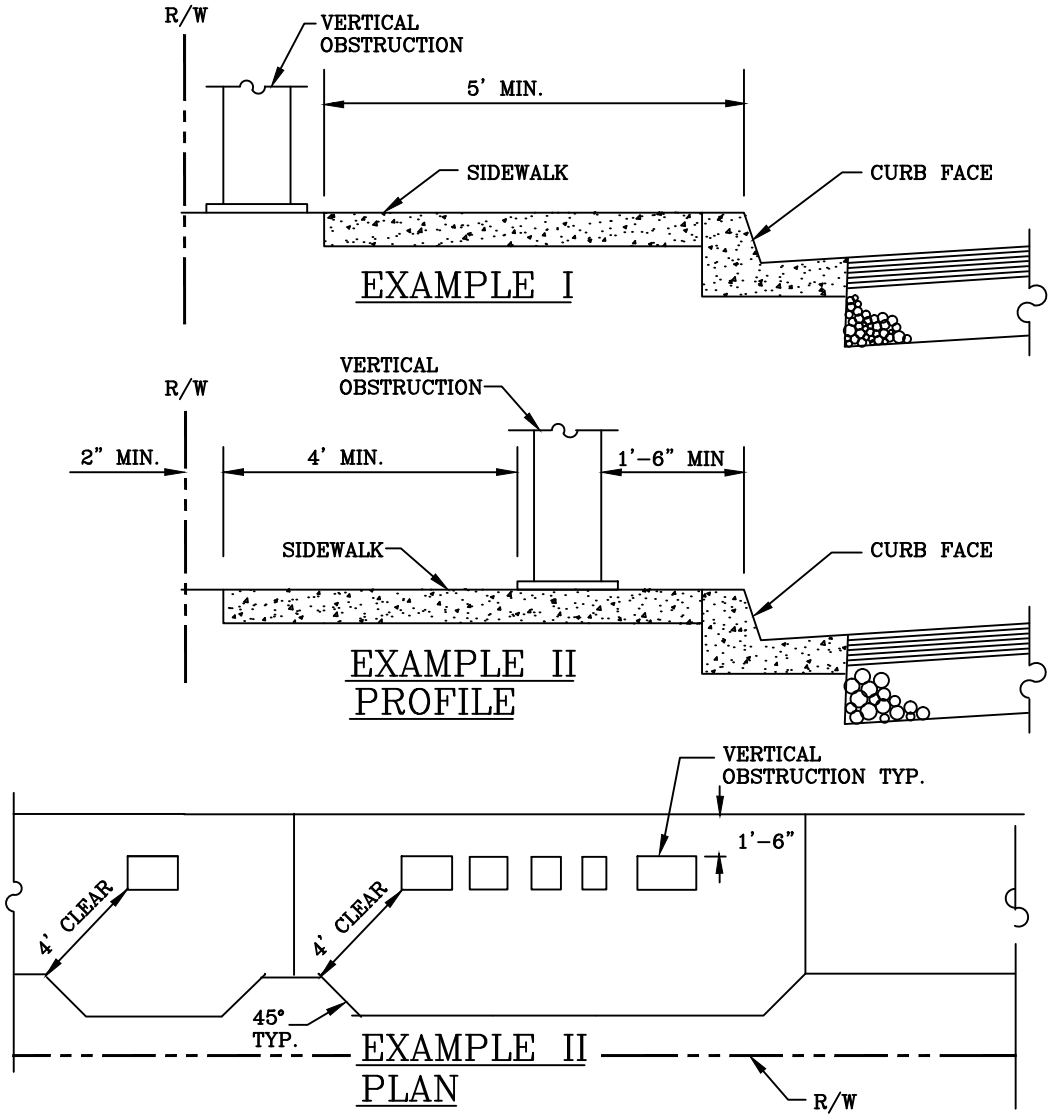

NOTES:

1. THE DISTANCE FROM THE CURB FACE TO ANY PART OF A FIRE HYDRANT SHALL BE NOT LESS THAN TWO (2) FEET OR GREATER THAN SEVEN (7) FEET.
2. FOR ANY VERTICAL OBSTRUCTION THE MINIMUM CLEARANCE FROM THE CURB SHALL BE 1 FOOT-6 INCHES.
3. THE MINIMUM WIDTH OF CLEAR SIDEWALK SHALL BE FOUR (4) FEET FROM ANY VERTICAL OBSTRUCTION.
4. ANY UTILITY VAULT WITHIN THE SIDEWALK AREA SHALL HAVE A BOLT-DOWN COVER WITH A SLIP RESISTANT FINISH (SEE STD. 220)
5. ANY PARKWAY OBSTRUCTION SHALL BE SURROUNDED BY A CONCRETE PAD.
6. REFER TO STD. PLAN 201 FOR SIDEWALK CONSTRUCTION. CONTROL JOINTS SHALL BE LOCATED TO THE SATISFACTION OF THE CITY INSPECTOR.

PARKWAY OBSTRUCTIONS

MARK CARROLL, R.C.E. 31515
CITY OF IRVINE - CITY ENGINEER

AUGUST 2013
DATE

STD. PLAN 218

SHEET 1 OF 1

CITY OF IRVINE

PUBLIC WORKS

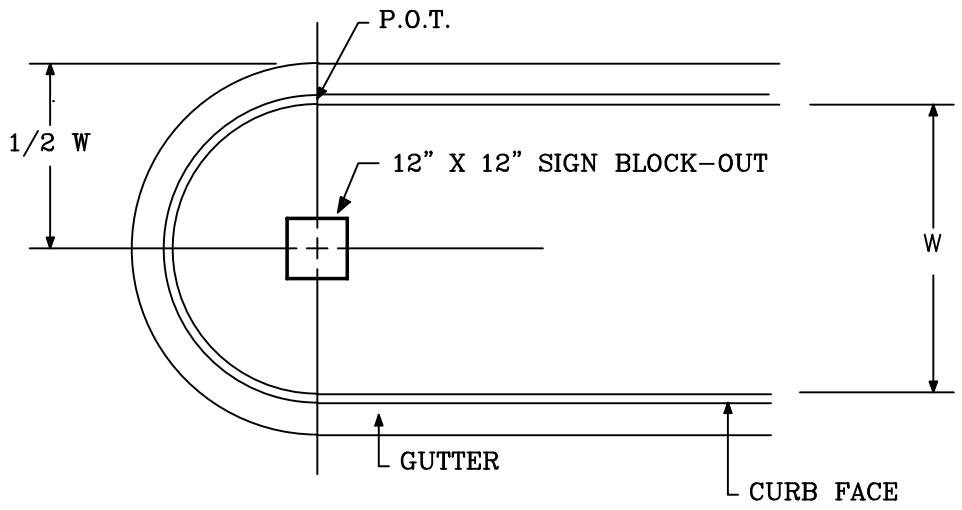

MEDIAN LOCATION

NOTES:

1. 12 INCH X 12 INCH SIGN POST BLOCK-OUTS SHALL BE USED FOR ANY SIGN IN CONCRETE.
2. MINIMUM CLEARANCE OF SIGN POST BLOCK-OUT SHALL BE IN ACCORDANCE WITH STANDARD NO. 218.
3. IF ONLY THE NOSE RADIUS OF THE MEDIAN IS PAVED, PLACE THE SIGN IN THE DIRT IMMEDIATELY BEHIND THE PAVING.
4. THE LOWEST PORTION OF THE SIGN MUST BE A MINIMUM OF 7 FEET ABOVE THE MEDIAN SURFACE.
5. 3/8 INCH GRAVEL, 4 INCHES DEEP SHALL BE REQUIRED IN BLOCK OUT.

SIGN POST BLOCK-OUT

MARK CARROLL, R.C.E. 31515
CITY OF IRVINE - CITY ENGINEER

AUGUST 2013
DATE

STD. PLAN 219

SHEET 1 OF 1

CITY OF IRVINE

PUBLIC WORKS

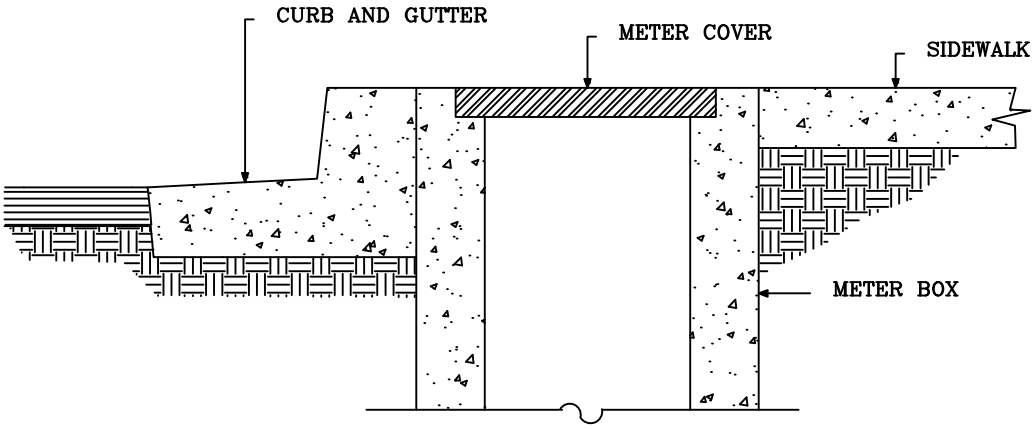

METER BOX DETAIL

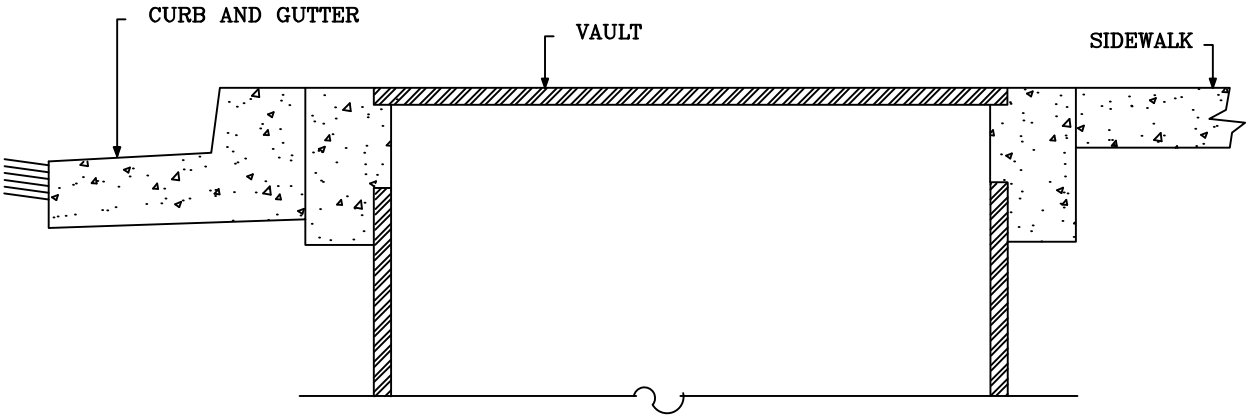

VAULT DETAIL

1. METER BOXES AND UTILITY VAULTS IN SIDEWALKS SHALL BE PERPENDICULAR TO AND ADJACENT WITH THE BACK OF CURB, AND SHALL BE FLUSH WITH TOP OF SIDEWALK.
2. METER BOXES AND UTILITY VAULTS WITHIN THE SIDEWALK AREA SHALL HAVE A BOLT DOWN COVER WITH A SLIP-RESISTANT FINISH, COVER SHALL BE BOLTED DOWN WITH 5 SIDED BOLTS, TOP OF BOLTS SHALL BE FLUSH WITH THE TOP OF COVER.

METER & VAULT COVER DETAIL

MARK CARROLL, R.C.E. 31515
CITY OF IRVINE - CITY ENGINEER

AUGUST 2013
DATE

STD. PLAN
220

SHEET 1 OF 1

CITY OF IRVINE
PUBLIC WORKS

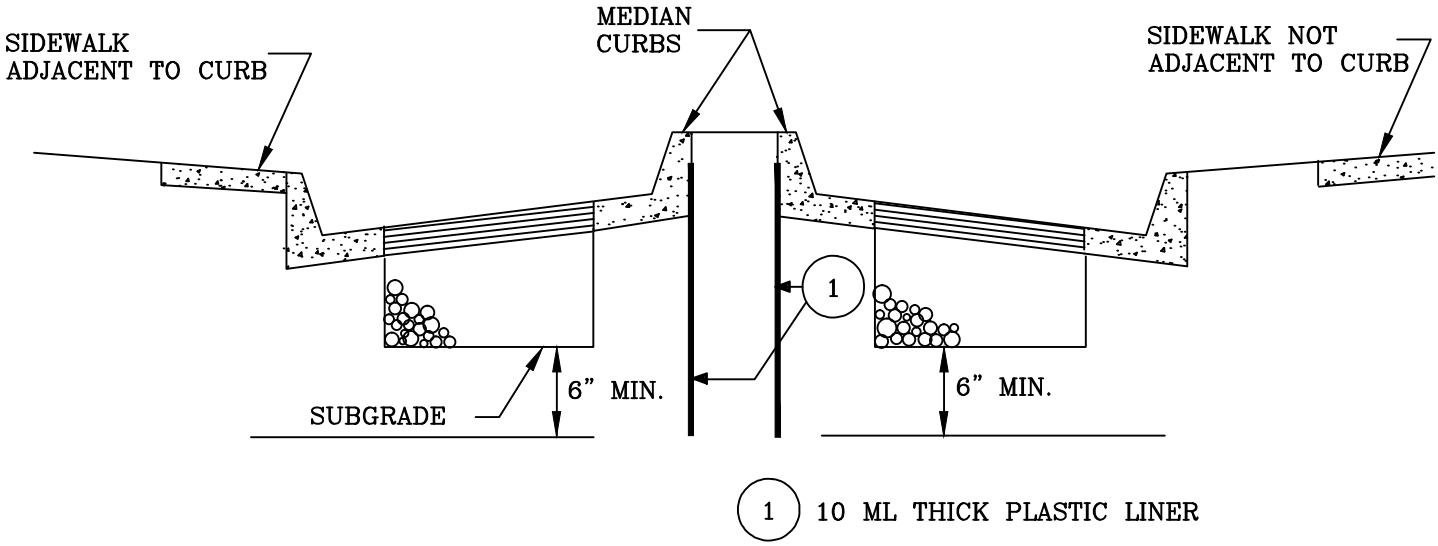

NOTES

1. MOISTURE BARRIER SHALL BE REQUIRED IF TURF LANDSCAPING IS INCORPORATED IN THE MEDIAN AREA.
2. TURF LANDSCAPING SHALL ONLY BE PERMITTED WITHIN A MEDIAN AREA IF EXISTING LANDSCAPED MEDIAN AREA IS TURF, UNLESS OTHERWISE SPECIFIED OR APPROVED BY THE CITY ENGINEER.
3. MOISTURE BARRIER WILL NOT BE REQUIRED IF SHRUBS OR GROUND COVER LANDSCAPING ARE PLANTED IN THE MEDIAN AREA.
4. TRENCH FOR MOISTURE BARRIER SHALL BE EXCAVATED TO A DEPTH OF 6" BELOW SUB GRADE OR A MINIMUM OF 24" (WHICHEVER IS GREATER).
5. MOISTER BARRIER SHALL BE 10 ML PLASTIC SHEETING.
6. 10 ML THICK MOISTURE BARRIER SHALL BE TRIMMED TO 1" BELOW TOP OF MEDIAN CURB UPON COMPLETION OF TRENCH BACKFILL.
7. MOISTURE BARRIER SHALL BE INSTALLED PRIOR TO INSTALLING LANDSCAPE IRRIGATION.
8. LANDSCAPE IRRIGATION SYSTEM SHALL BE PLACED IN MOISTURE BARRIER TRENCH PRIOR TO TRENCH BACK FILL.
9. FILL WITHIN MOISTURE BARRIER/LANDSCAPE IRRIGATION TRENCH SHALL BE COMPACTED BY FLOODING. NO MECHANICAL COMPACTION SHALL BE USED TO COMPACT FILL WITHIN MOISTURE BARRIER/LANDSCAPE IRRIGATION TRENCH.

MOISTURE BARRIER DETAIL

MARK CARROLL, R.C.E. 31515
CITY OF IRVINE - CITY ENGINEER

AUGUST 2013
DATE

STD. PLAN 222

SHEET 1 OF 1

CITY OF IRVINE
PUBLIC WORKS

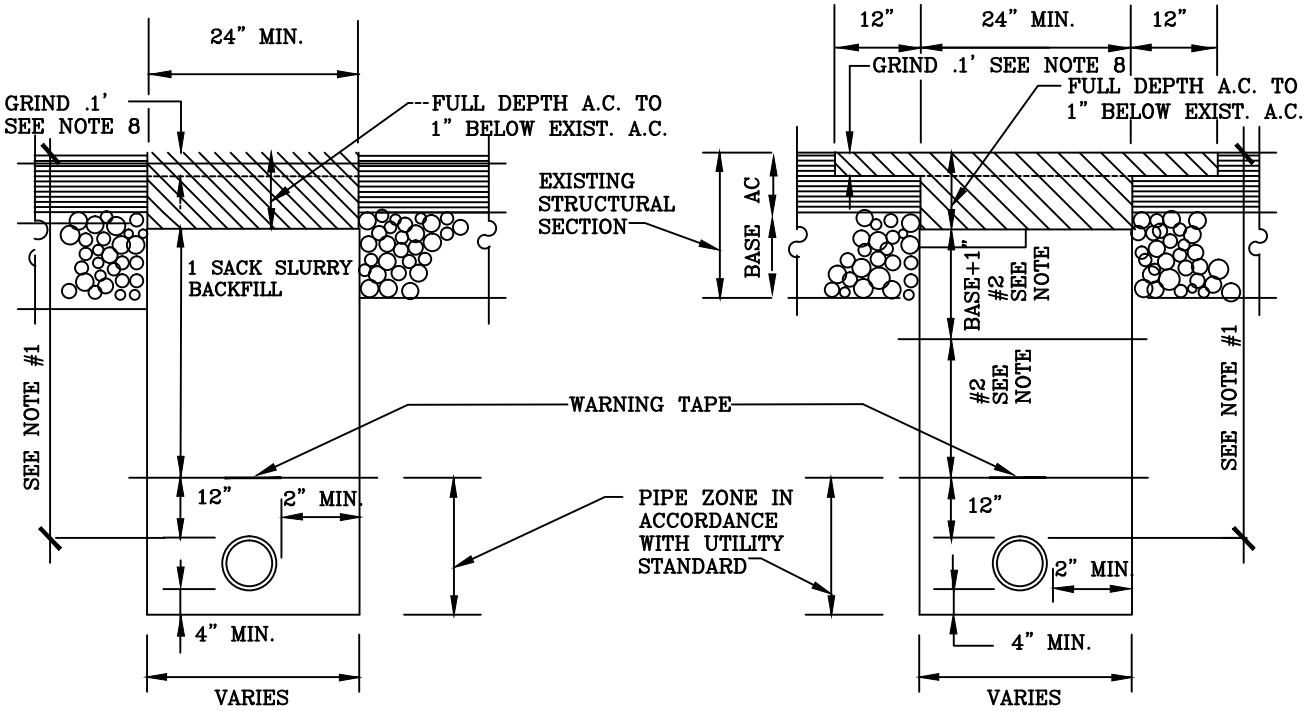

NOTES:

1. DEPTH OF UTILITIES ON ARTERIAL STREETS SHALL BE 42 INCHES MINIMUM COVERAGE, OR AS APPROVED BY THE CITY ENGINEER. DEPTH OF UTILITIES ON NON-ARTERIAL STREETS SHALL BE 30 INCHES MINIMUM COVERAGE, OR AS APPROVED BY THE CITY ENGINEER.
2. BACK FILL ABOVE PIPE ZONE SHALL BE COMPACTED TO 90% MAXIMUM DENSITY WHEN SLURRY BACK FILL IS NOT USED (WITH THE EXCEPTION OF THE TWO FEET IMMEDIATELY UNDER THE ASPHALT WHICH SHALL BE UNTREATED BASE COMPACTED TO 95% MAXIMUM DENSITY). COMPACTION TESTS SHALL BE TAKEN BY CONTRACTOR AT RANDOM LOCATIONS FOR EVERY 8 INCHES OF LIFT. FLOODING OR JETTING SHALL NOT BE ALLOWED.
3. ALL UTILITIES TO BE INSTALLED BENEATH PUBLIC STREETS, INTERSECTIONS, AND STREET CROSSINGS (LOCAL STREETS EXCEPTED) SHALL BE BORED UNLESS OTHERWISE APPROVED BY THE INSPECTION SUPERINTENDENT. IF OPEN CUTTING OF A STREET IS ALLOWED, REPAIR OF THE STREET SHALL BE IN ACCORDANCE WITH THIS STANDARD PLAN.
4. THE EDGE OF THE TRENCH SHALL BE A NEAT CUT AS APPROVED BY THE CITY INSPECTOR. THE TRENCH SHALL BE CAPPED WITH AC EVEN WITH THE FINISHED GRADE TO THE SATISFACTION OF THE CITY INSPECTOR.
5. ALTERNATE A SHALL BE USED ON ARTERIAL STREETS, AT INTERSECTIONS, AND FOR STREET CROSSINGS, UNLESS CITY ENGINEER APPROVES THE USE OF ALTERNATE B. ALTERNATE B MAY BE USED FOR PARALLEL CUTS TO A STREET IF APPROVED BY THE CITY INSPECTOR.
6. TRENCHING WITH ROCK WHEELS SHALL NOT BE ALLOWED.
7. TRENCH WIDTH BELOW STRUCTURAL SECTION CAN BE LESS THAN 24 INCHES IF APPROVED BY THE CITY INSPECTOR.
8. UPON COMPLETION OF BACKFILLING THE TRENCH, ASPHALT CONCRETE SHALL BE INSTALLED FLUSH WITH THE EXISTING PAVEMENT. SEVEN CALENDAR DAYS AFTER COMPLETION OF AFOREMENTIONED ASPHALT CONCRETE IT SHALL BE GROUND TO 0.1 FOOT DEPTH FOR THE ENTIRE LENGTH OF THE TRENCH UNLESS OTHERWISE APPROVED BY THE CITY INSPECTOR. NEW ASPHALT CONCRETE SHALL BE INSTALLED EVEN WITH THE FINISH GRADE.
9. ALL TRENCHES SHALL BE COMPACTED BY SELF-PROPELLED ROLLERS. NO WHEEL ROLLING IS ALLOWED.

UTILITY TRENCH REPAIR

MARK CARROLL, R.C.E. 31515
CITY OF IRVINE - CITY ENGINEER

AUGUST 2013
DATE

STD. PLAN 223

SHEET 1 OF 1

CITY OF IRVINE

PUBLIC WORKS

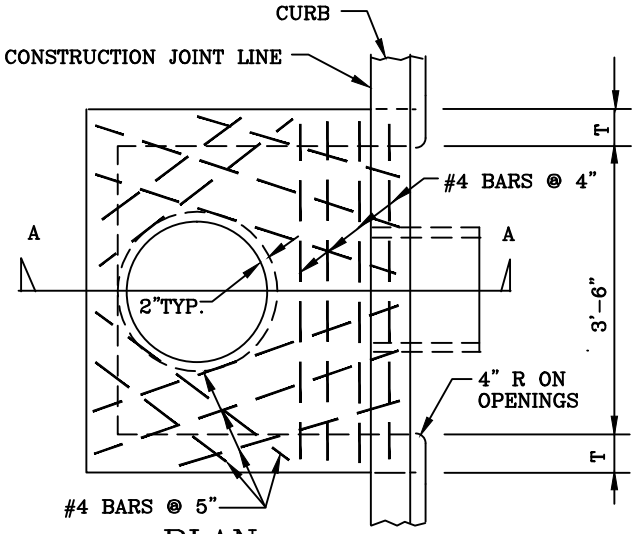

PLAN

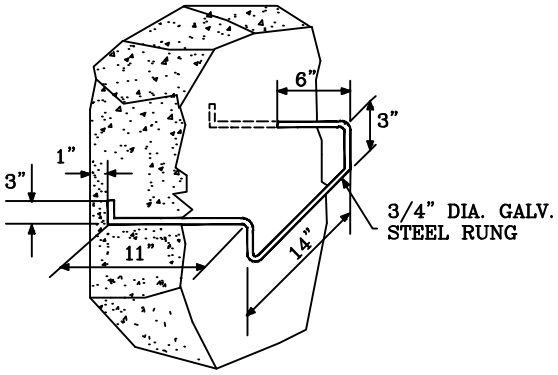

STEP DETAIL

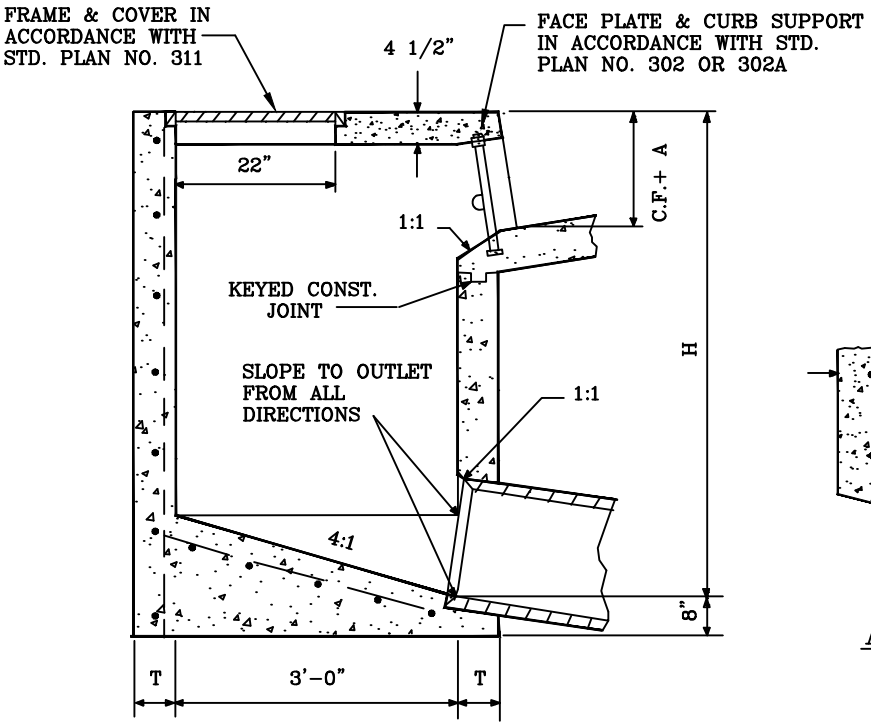

SECTION A-A

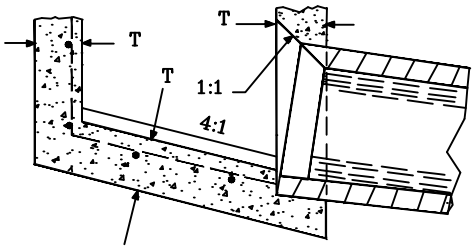

ALTERNATE FLOOR

CATCH BASIN TYPE I

MARK CARROLL, R.C.E. 31515
CITY OF IRVINE - CITY ENGINEER

AUGUST 2013
DATE

STD. PLAN 300

SHEET 1 OF 2

NOTES:

1. CURB OPENING SHALL CONFORM TO ADJACENT CURB ALIGNMENT.
2. REINFORCING STEEL FOR WALLS AND FLOOR SHALL BE #4 BARS @ 18 INCHES O.C. BOTH WAYS, PLACED 1-1/2 INCHES CLEAR TO INSIDE OF CATCH BASIN.
3. STEPS:
   a. 'H' IS 3 FEET- 6 INCHES OR LESS.
      NO STEPS REQUIRED
   b. 'H' IS GREATER THAN 3 FEET- 6 INCHES.
      INSTALL LOWEST STEP 24 INCHES ABOVE FLOOR AND OTHER STEP(S) AT 16 INCH INTERVALS TO WITHIN 18 INCHES OF THE TOP OF THE BOX.
   c. PLACE STEPS IN A WALL THAT DOES NOT CONTAIN THE PIPE PENETRATION.
4. PIPES MAY BE PLACED IN ANY WALL.
5. CATCH BASIN FLOORS SHALL BE SLOPED FROM ALL DIRECTIONS TOWARDS OUTLET PIPE AND SHALL HAVE A WOOD TROWEL FINISH
6. DIMENSIONS:
   H = 4 FEET- 0 INCHES UNLESS OTHERWISE SHOWN.
   T = 6 INCHES FOR H = 8 FEET- 0 INCHES OR LESS.
   T = 8 INCHES FOR H = 8 FEET - 1 INCH TO 20 FEET - 0 INCHES.
7. CURB FACE AT CATCH BASIN OPENING SHALL BE EQUAL TO EXISTING C.V. + DEPTH OF LOCAL DEPRESSION (A). SEE STD. PLAN No. 303.
8. CONCRETE: f'c = 3250 psi AT 28 DAYS.
9. TREMIES OR OTHER SUITABLE CONVEYANCE FOR CONCRETE SHALL BE REQUIRED WHEN CONCRETE FALLS MORE THAN 6-FEET.

CATCH BASIN TYPE I

MARK CARROLL, R.C.E. 31515
CITY OF IRVINE - CITY ENGINEER

AUGUST 2013
DATE

STD. PLAN 300

CITY OF IRVINE

PUBLIC WORKS

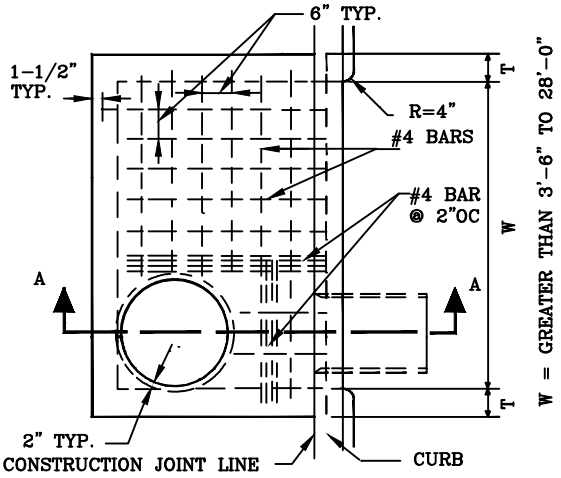

PLAN

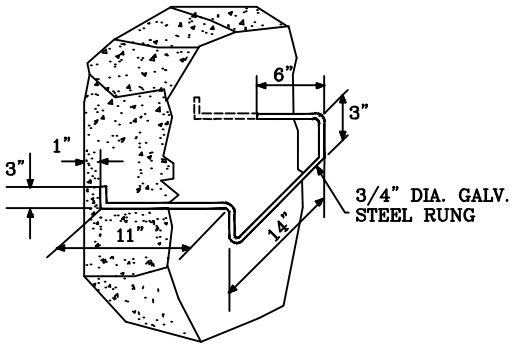

STEP DETAIL

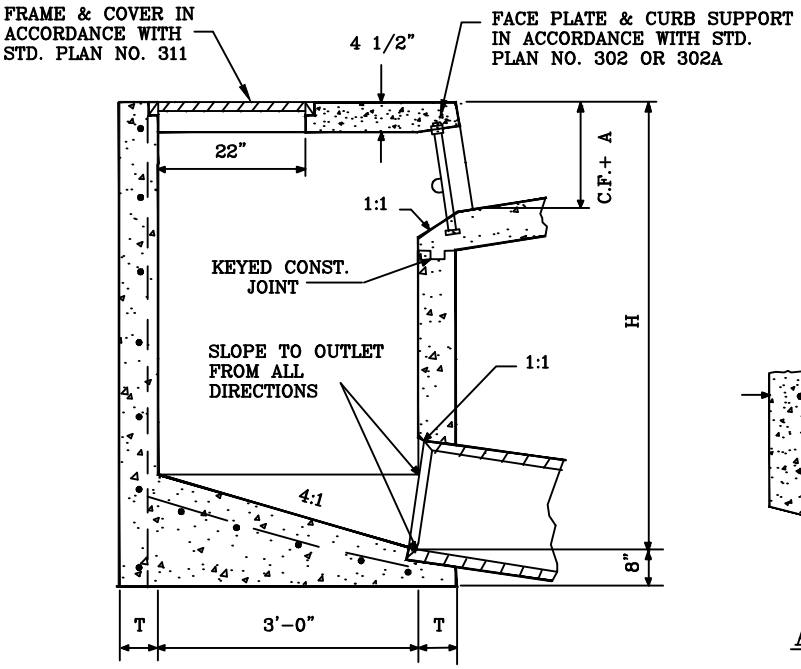

SECTION A-A

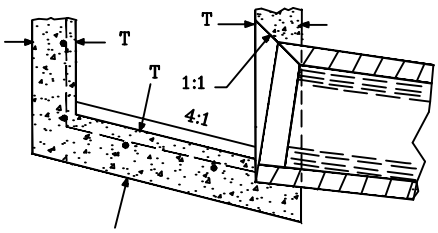

ALTERNATE FLOOR

CATCH BASIN TYPE II

MARK CARROLL, R.C.E. 31515
CITY OF IRVINE - CITY ENGINEER

AUGUST 2013
DATE

STD. PLAN 301

SHEET 1 OF 2

NOTES:

1. CURB OPENING SHALL CONFORM TO ADJACENT CURB ALIGNMENT.
2. REINFORCING STEEL FOR WALLS AND FLOOR SHALL BE #4 BARS @ 18 INCHES O.C. BOTH WAYS, PLACED 1-1/2 INCHES CLEAR TO INSIDE OF CATCH BASIN.
3. STEPS:
   a. 'H' IS 3 FEET- 6 INCHES OR LESS.
      NO STEPS REQUIRED
   b. 'H' IS GREATER THAN 3 FEET- 6 INCHES.
      INSTALL LOWEST STEP 24 INCHES ABOVE FLOOR AND OTHER STEP(S) AT 16 INCH INTERVALS TO WITHIN 18 INCHES OF THE TOP OF THE BOX.
   c. PLACE STEPS IN A WALL THAT DOES NOT CONTAIN THE PIPE PENETRATION.
4. PIPES MAY BE PLACED IN ANY WALL.
5. CATCH BASIN FLOORS SHALL BE SLOPED FROM ALL DIRECTIONS TOWARDS OUTLET PIPE AND SHALL HAVE A WOOD TROWEL FINISH
6. DIMENSIONS:
   H = 4 FEET- 0 INCHES UNLESS OTHERWISE SHOWN.
   T = 6 INCHES FOR H = 8 FEET- 0 INCHES OR LESS.
   T = 8 INCHES FOR H = 8 FEET - 1 INCH TO 20 FEET - 0 INCHES.
7. CURB FACE AT CATCH BASIN OPENING SHALL BE EQUAL TO EXISTING C.V. + DEPTH OF LOCAL DEPRESSION (A). SEE STD. PLAN No. 303.
8. CONCRETE: f'c = 3250 psi AT 28 DAYS.
9. TREMIES OR OTHER SUITABLE CONVEYANCE FOR CONCRETE SHALL BE REQUIRED WHEN CONCRETE FALLS MORE THAN 6-FEET.

CATCH BASIN TYPE II

MARK CARROLL, R.C.E. 31515
CITY OF IRVINE - CITY ENGINEER

AUGUST 2013
DATE

STD. PLAN
301

CITY OF IRVINE
PUBLIC WORKS

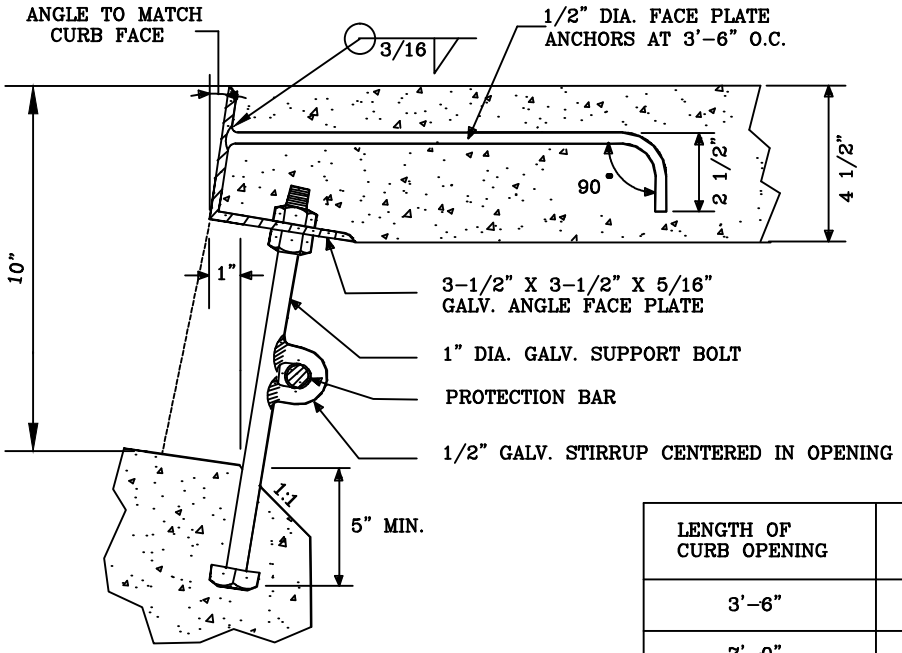

FACE PLATE ANCHORAGE AND CURB SUPPORT DETAIL

LENGTH OF CURB OPENING	# OF ANCHORS
3'-6"	2
7'-0"	3
10'-0"	4
14'-0"	5
21'-0"	7

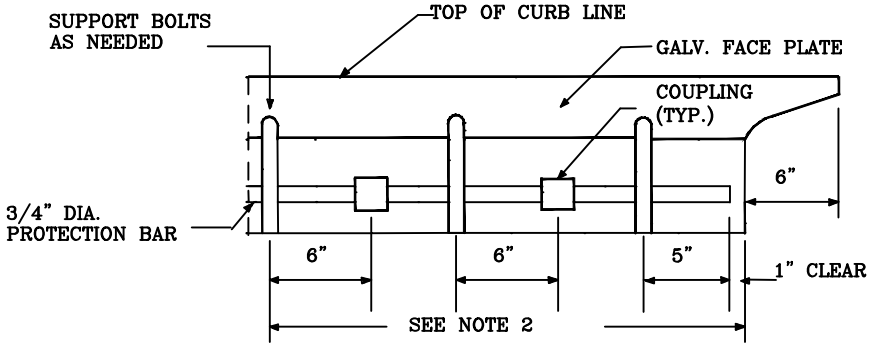

PROTECTION BAR DETAIL

CATCH BASIN DETAILS (FOR TYPE A-2 CURB & GUTTER)

MARK CARROLL, R.C.E. 31515
CITY OF IRVINE - CITY ENGINEER

AUGUST 2013
DATE

STD. PLAN 302

SHEET 1 OF 2

NOTES:

1. ONE SUPPORT BOLT SHALL BE PLACED 12 INCHES FROM EACH END OF FACE PLATE.
2. SUPPORT BOLTS SHALL BE SYMMETRICALLY SPACED IN THE CURB OPENING SO THAT THE UNSUPPORTED SPAN IS NOT MORE THAN 4 FEET.
3. ONE COUPLING SHALL BE PLACED 6 INCHES TO THE RIGHT OR LEFT OF EACH SUPPORT BOLT WITH THE EXCEPTION OF THE LAST BOLT. COUPLINGS SHALL BE THREADED TO FACILITATE REMOVAL OF PROTECTION BAR.
4. SUPPORT BOLTS SHALL BE INSTALLED IN ALL CATCH BASINS AND SPACED AS SHOWN IN THE PROTECTION BAR DETAIL.
5. FACE PLATE ANCHORS SHALL BE UNIFORMLY SPACED NOT TO EXCEED 4 FEET- 0 INCHES AND SHALL BE PLACED 4 1/2 INCHES FROM EACH END OF THE FACE PLATE.
6. A COUPLING MAY BE OMITTED PROVIDED THE PROTECTION BAR IS REMOVABLE AFTER INSTALLATION.
7. ALL METAL SHALL BE GALVANIZED AFTER FABRICATION.
8. SUPPORT BOLTS AND ANCHORS MAY BE ATTACHED BY A FULL PENETRATION BUTT WELD AS AN ALTERNATE SOLUTION.
9. PLACE 3/4 INCH DIAMETER PROTECTION BAR (ALHAMBRA FOUNDARY A-1564 OR EQUAL) HORIZONTALLY ACROSS THE ENTIRE LENGTH OF THE CURB OPENING. ONE PROTECTION BAR REQUIRED FOR 9 INCHES OR LESS OPENING AND TWO BARS FOR OPENINGS IN EXCESS OF 9 INCHES.
10. HEIGHT OF CURB OPENING WILL VARY AS SHOWN ON STD. PLAN NO. 303.
11. THE WORDS "NO DUMPING, DRAINS TO OCEAN" SHALL BE STENCILED ON TOP OF THE CATCH BASIN INLET WITH 2 INCH LETTERS USING BLACK EPOXY PAINT. ANY VARIATIONS MUST BE APPROVED BY THE CITY ENGINEER.

CITY OF IRVINE
PUBLIC WORKS

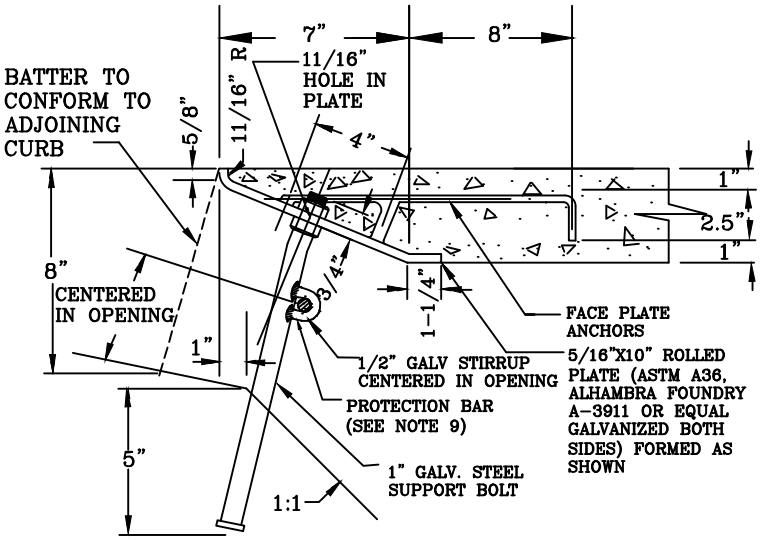

BOLT AND ANCHOR DETAIL FOR FACE PLATE

NOTES:

1. ONE SUPPORT BOLT SHALL BE PLACED 12 INCHES FROM EACH END OF FACE PLATE.
2. SUPPORT BOLTS SHALL BE SYMMETRICALLY SPACED IN THE CURB OPENING SO THAT THE UNSUPPORTED SPAN IS NOT MORE THAN 4 FEET.
3. ONE COUPLING SHALL BE PLACED 6 INCHES TO THE RIGHT OR LEFT OF EACH SUPPORT BOLT WITH THE EXCEPTION OF THE LAST SUPPORT BOLT. COUPLINGS SHALL BE THREADED TO FACILITATE REMOVAL OF PROTECTION BAR.
4. SUPPORT BOLTS SHALL BE INSTALLED IN ALL CATCH BASINS AND SPACED AS SHOWN IN THE PROTECTION BAR DETAIL.
5. FACE PLATE ANCHORS SHALL BE UNIFORMLY SPACED NOT TO EXCEED 4 FEET- 0 INCHES O.C. AND SHALL BE PLACED 4 1/2 INCHES FROM EACH END OF THE FACE PLATE.
6. A COUPLING MAY BE OMITTED PROVIDED THE PROTECTION BAR IS REMOVABLE AFTER INSTALLATION.
7. ALL METAL SHALL BE GALVANIZED AFTER FABRICATION.
8. SUPPORT BOLTS AND ANCHORS MAY BE ATTACHED BY A FULL PENETRATION BUTT WELD AS AN ALTERNATE SOLUTION.
9. PLACE 3/4 INCH DIAMETER PROTECTION BAR (ALHAMBRA FOUNDRY A-1564 OR EQUAL) HORIZONTALLY ACROSS THE ENTIRE LENGTH OF THE CURB OPENING. ONE PROTECTION BAR REQUIRED FOR 9 INCHES OR LESS OPENING AND TWO BARS FOR OPENINGS IN EXCESS OF 9 INCHES.
10. HEIGHT OF OPENING WILL VARY AS SHOWN ON STANDARD PLAN NO. 303.
11. THE WORDS "NO DUMPING, DRAINS TO OCEAN" SHALL BE STENCILED ON TOP OF THE CATCH BASIN INLET WITH 2 INCH LETTERS USING BLACK EPOXY PAINT. ANY VARIATIONS MUST BE APPROVED BY THE CITY ENGINEER.

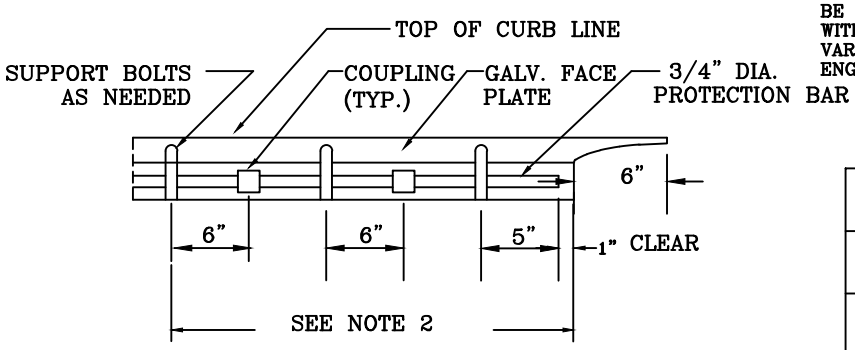

PROTECTION BAR DETAIL

LENGTH OF CURB OPENING	# OF ANCHORS
3'-6"	2
7'-0"	3
10'-0"	4
14'-0"	5
21'-0"	7

CATCH BASIN DETAILS (FOR TYPE "D" CURB & GUTTER)

MARK CARROLL, R.C.E. 31515
CITY OF IRVINE - CITY ENGINEER

AUGUST 2013
DATE

STD. PLAN 302A

SHEET 1 OF 1

CITY OF IRVINE
PUBLIC WORKS

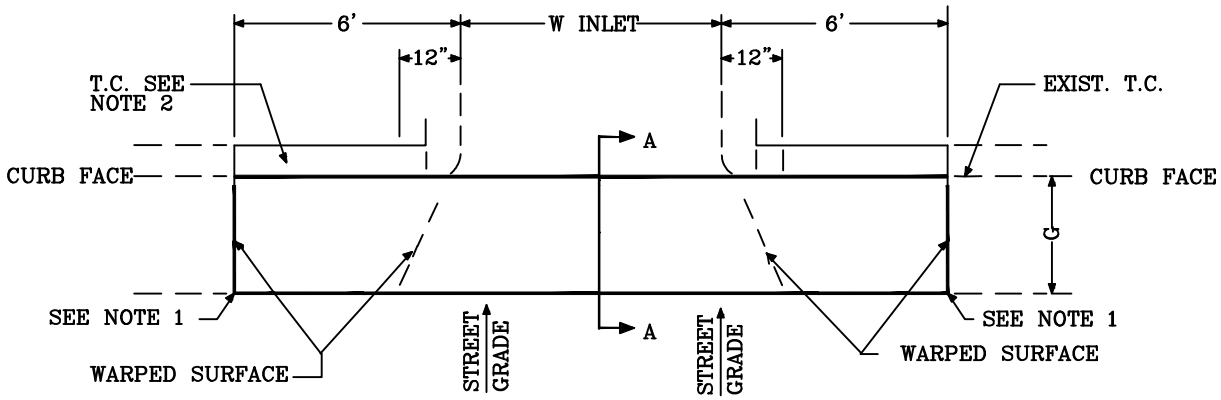

PLAN

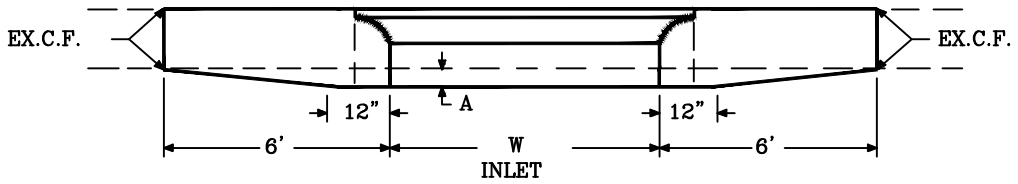

ELEVATION AT CURB FACE

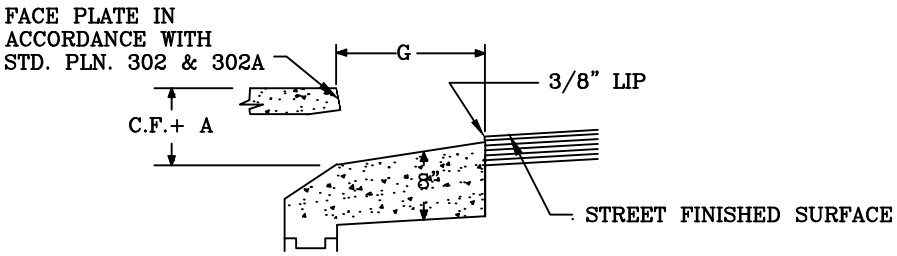

SECTION A–A

NOTE:
1. WHERE NO CURB EXISTS, CURB SHALL BE CONSTRUCTED BETWEEN ENDS OF LOCAL DEPRESSION.
2. G = WIDTH OF EXISTING GUTTER.
3. A = 1 INCH FOR G = 1 FOOT AND 2 INCHES FOR G GREATER THAN 1 FOOT.
4. CONCRETE SHALL HAVE COMPRESSIVE STRENGTH OF 3250 P.S.I. AT 28 DAYS.
5. DEPRESSION SHALL BE MONOLITHIC PLACEMENT.

LOCAL DEPRESSION

MARK CARROLL, R.C.E. 31515
CITY OF IRVINE - CITY ENGINEER

AUGUST 2013
DATE

STD. PLAN 303

SHEET 1 OF 1

CITY OF IRVINE
PUBLIC WORKS

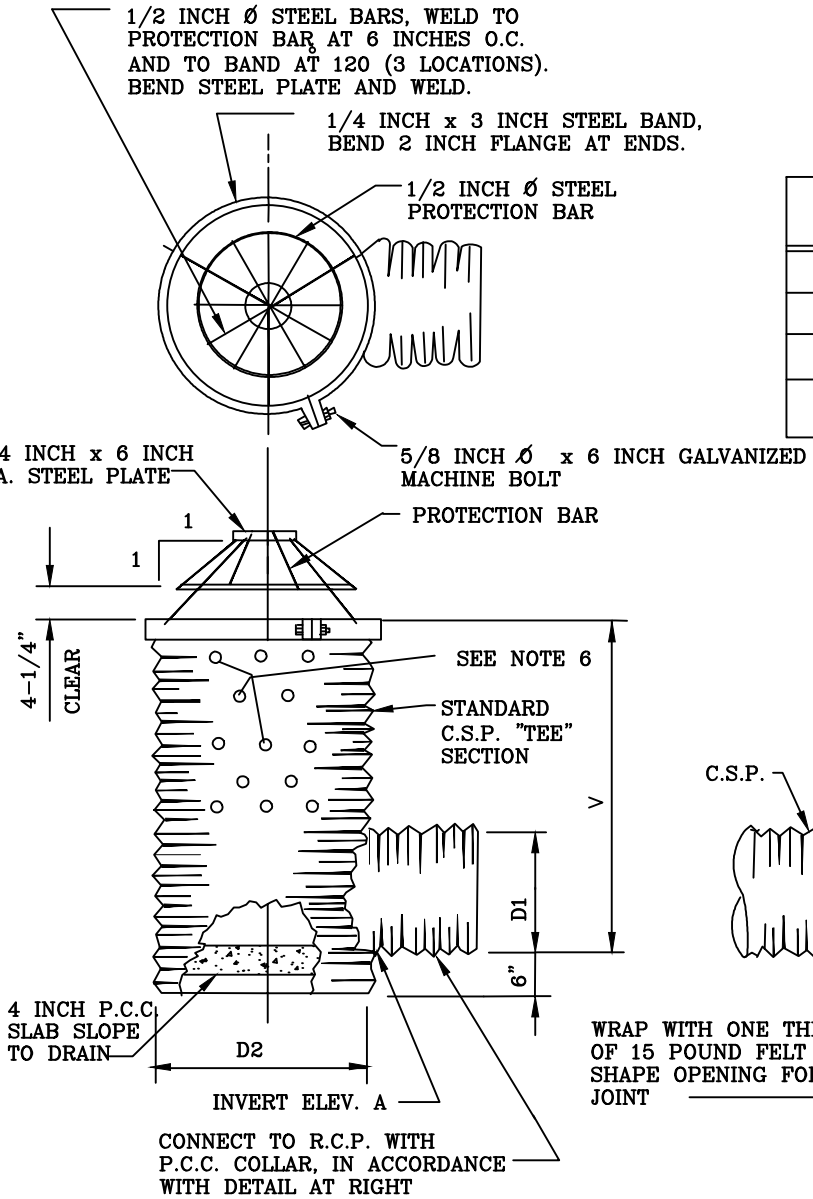

D2 RISER DIAMETER	C.S.P. GUAGE
18"–27"	16
30"–39"	14
42"–48"	12
51"–66"	10

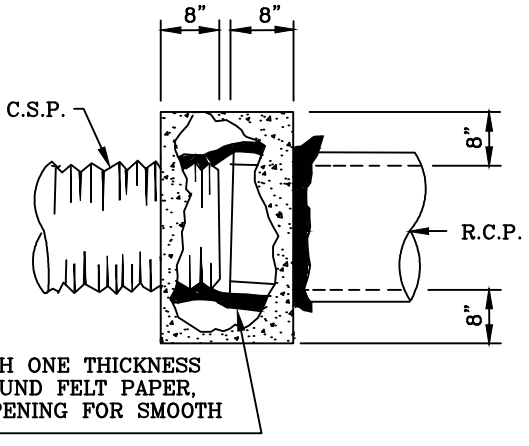

NOTES:
1. V, D1, D2 AND ELEVATION A SHALL BE SHOWN ON THE CONSTRUCTION PLANS.
2. GRATE ASSEMBLY SHALL BE FABRICATED TO FIT C.S.P. OF SIZE D2.
3. GRATE ASSEMBLY SHALL BE GALVANIZED AFTER FABRICATION.
4. R.C.P. SHALL BE SIZED TO FIT FUTURE CATCH BASIN DESIGN.
5. GRATE ASSEMBLY SHALL BE FABRICATED TO FIT THE OUTSIDE DIAMETER OF STANDARD JUNCTION STRUCTURE SHAFT IF INDICATED ON CONSTRUCTION PLANS.
6. 1/2 INCH WIDE SLOTS OR 1/2 INCH TO 1 INCH Ø HOLES.
7. D1 GAUGE SHALL BE SAME AS D2.

C.S.P. DROP INLET

MARK CARROLL, R.C.E. 31515
CITY OF IRVINE - CITY ENGINEER

AUGUST 2013
DATE

STD. PLAN 304

SHEET 1 OF 1

CITY OF IRVINE
PUBLIC WORKS

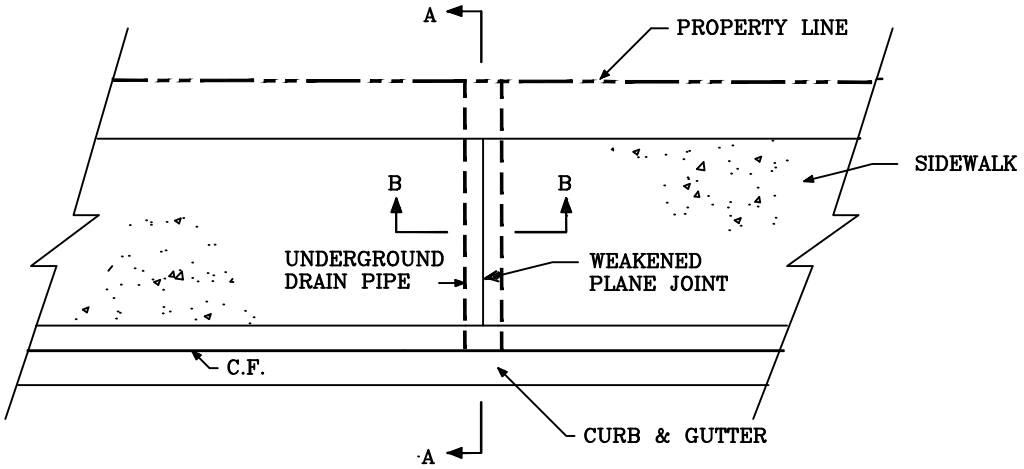

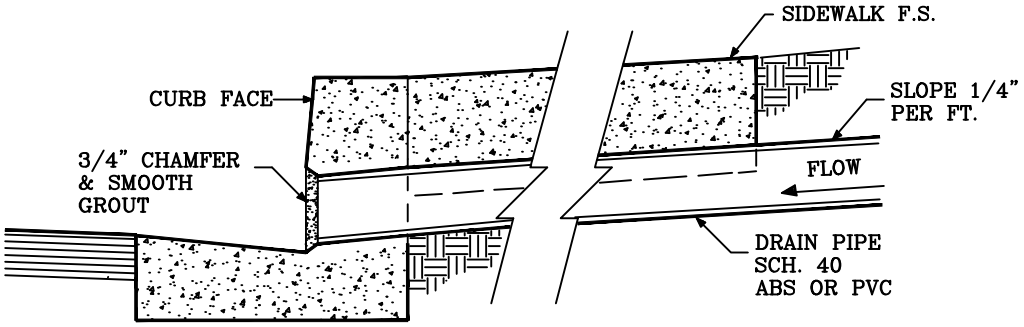

SECTION A–A

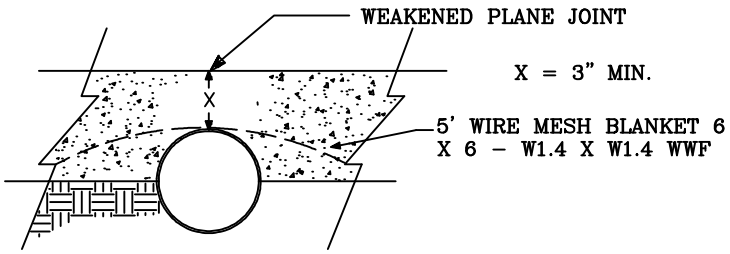

SECTION B–B

NOTE:
1. 3 INCH Ø MAXIMUM SIZE DRAIN PIPE FOR 6 INCH CURB FACE, AND 4 INCH Ø MAXIMUM SIZE FOR 8 INCH CURB FACE.
2. WEAKENED PLANE JOINTS PURSUANT TO SECTION 303–5.4.3 OF THE GREENBOOK. PLASTIC CONTROL JOINTS ARE NOT ALLOWED.

UNDER SIDEWALK DRAIN (NEW CONST.)

MARK CARROLL, R.C.E. 31515
CITY OF IRVINE - CITY ENGINEER

AUGUST 2013
DATE

STD. PLAN 305

SHEET 1 OF 1

CITY OF IRVINE
PUBLIC WORKS

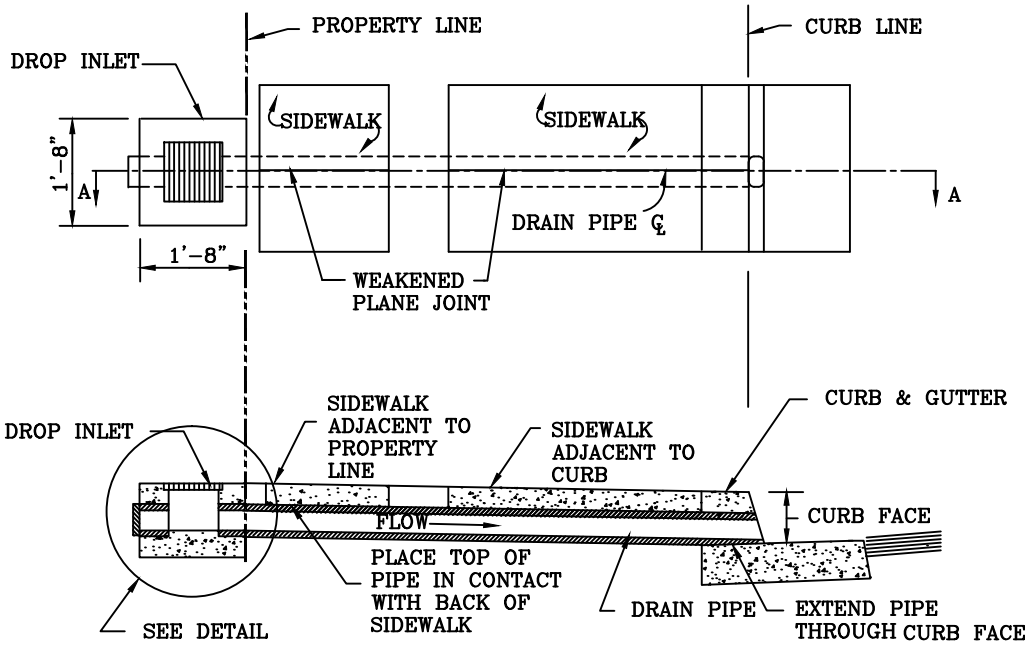

SECTION A–A

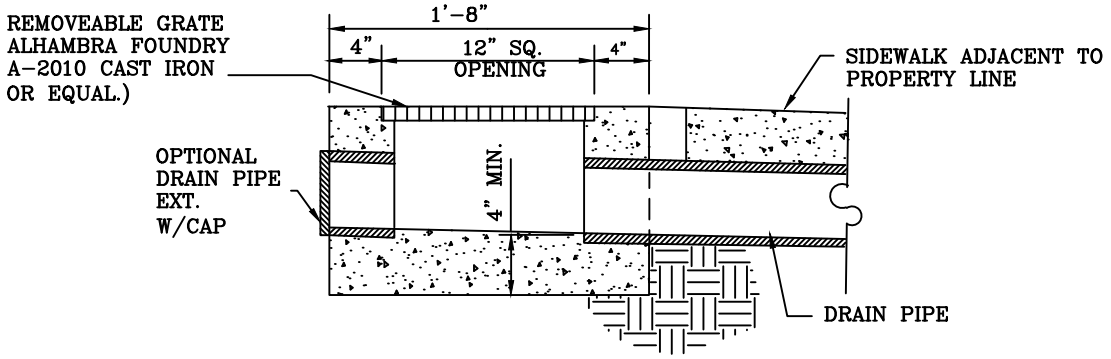

DROP INLET DETAIL

NOTES:
1. THIS STANDARD SHALL BE USED WHERE CURB & SIDEWALK ARE EXISTING.
2. CURB DRAIN SHALL BE CONSTRUCTED BY BORING THRU CURB FACE.
3. DRAIN PIPE SHALL BE CIRCULAR ASBESTOS CEMENT OR RIGID PLASTIC, WITH AN INSIDE DIAMETER OF 3 INCHES FOR 6 INCH CURB FACE & 4 INCHES FOR 8 INCH CURB FACE.
4. DROP INLET MAY BE AN APPROVED PREFABRICATED DESIGN OR CONSTRUCTED ON-SITE. A TEE OR ELBOW, 4. WITH A REMOVEABLE GRATE-TYPE CAP, ENCASED IN CONCRETE, IS AN ACCEPTABLE ALTERNATE.
5. WEAKENED PLANE JOINTS PURSUANT TO SECTION 303-5.4.3 OF THE GREENBOOK. PLASTIC CONTROL JOINTS ARE NOT ALLOWED.

UNDER SIDEWALK DRAIN (EXIST. CONST.)

MARK CARROLL, R.C.E. 31515
CITY OF IRVINE - CITY ENGINEER

AUGUST 2013
DATE

STD. PLAN 305A

SHEET 1 OF 1

CITY OF IRVINE
PUBLIC WORKS

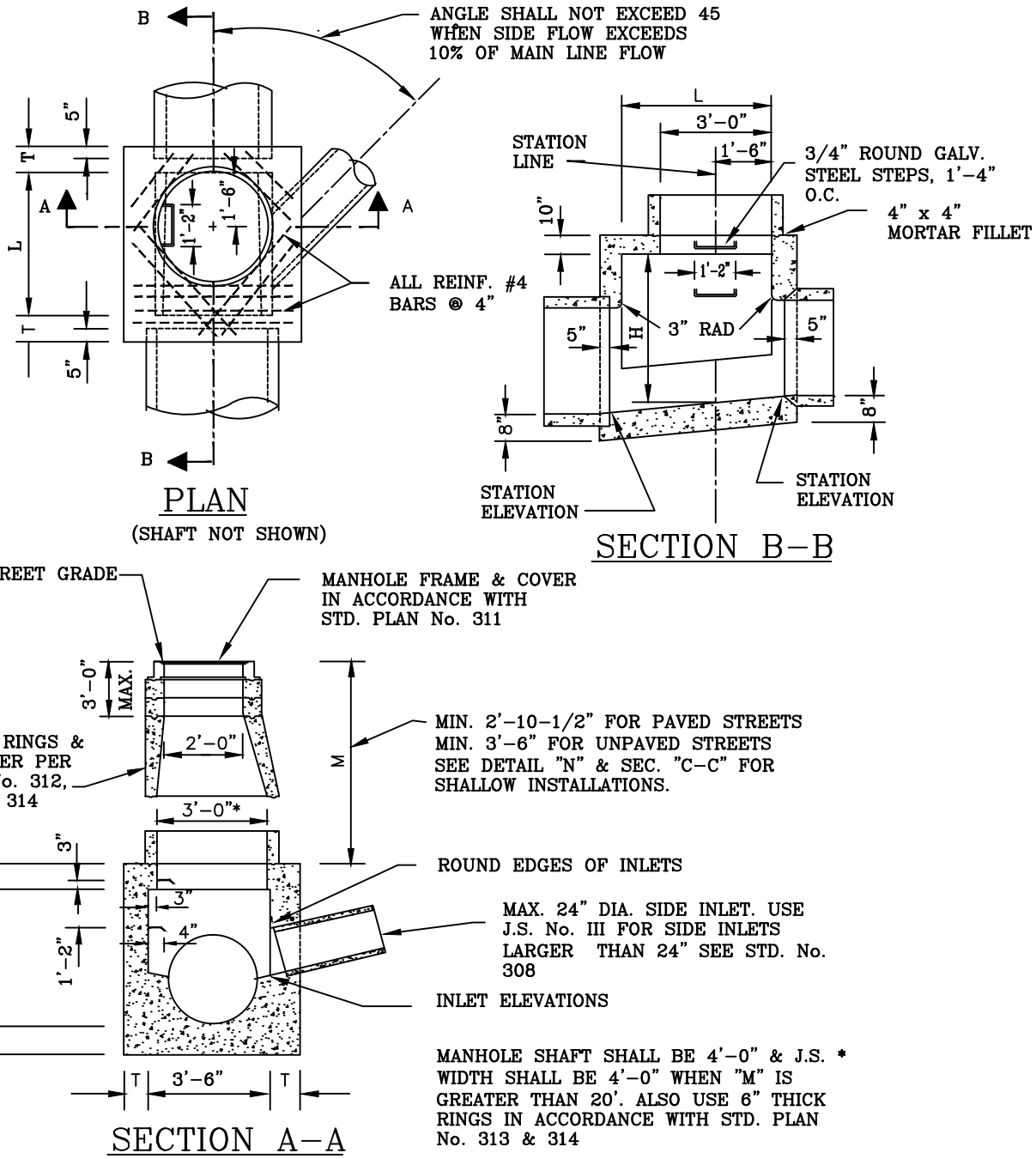

NOTES:
1. USE JUNCTION STRUCTURE No. I FOR MAINLINE PIPES 39 INCH DIA. OR LESS.
2. SEE STD. No. 306A FOR NOTES AND OTHER DETAILS.

JUNCTION STRUCTURE No. I

MARK CARROLL, R.C.E. 31515
CITY OF IRVINE - CITY ENGINEER

AUGUST 2013
DATE

STD. PLAN 306

SHEET 1 OF 1

CITY OF IRVINE
PUBLIC WORKS

	MAX.	MIN.
PAVED STREETS	11"	8-1/2"
UNPAVED STREETS	16"	15"

SEE NOTE 4

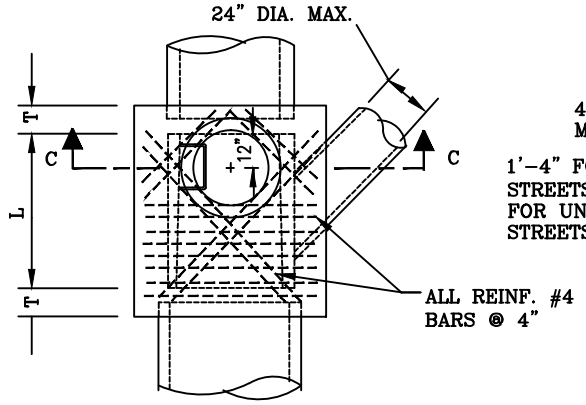

DETAIL N

SHAFT NOT SHOWN
SEE NOTE 4

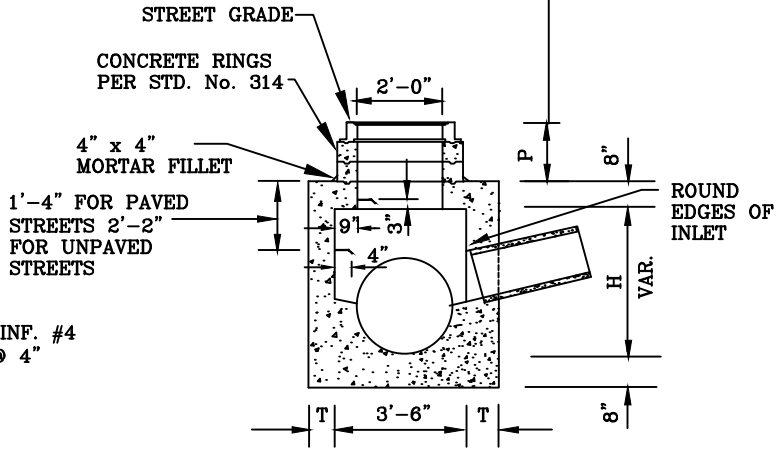

SECTION C-C

NOTES:

1. HEIGHT "H", IN SECTION A-A & SECTION B-B, SHALL NOT BE LESS THAN 4'-0", BUT MAY BE INCREASED AT THE OPTION OF THE ENGINEER, PROVIDED THAT THE VALUE OF "M" (SEE STD. PLAN No. 306) SHALL BE NOT LESS THAN THE MINIMUM SPECIFIED AND THAT THE REDUCER SHALL BE USED. FOR "H", IN SECTION C-C, SEE NOTE 4.
2. LENGTH "L" SHALL BE 4 FEET UNLESS OTHERWISE SHOWN ON THE PLANS.
3. THE SHAFT SHALL BE CONSTRUCTED IN ACCORDANCE WITH SECTION C-C & DETAIL "N" WHEN DEPTH "M" FROM STREET GRADE TO TOP OF BOX IS LESS THAN 2'-10-1/2" FOR PAVED STREETS OR 3'-6" FOR UNPAVED STREETS (SEE STD. No. 306).
4. DEPTH "P" MAY BE REDUCED TO AN ABSOLUTE LIMIT OF 6 INCHES WHEN LARGER VALUE OF "P" WOULD REDUCE "H", IN SECTION C-C, TO 3 FEET- 6 INCHES OR LESS.
5. STEPS SHALL BE 3/4 INCH ROUND GALVANIZED STEEL AND ANCHORED NOT LESS THAN 6 INCHES IN THE WALLS OF STRUCTURE. UNLESS OTHERWISE SHOWN, STEPS SHALL BE PLACED 1'-4" ON CENTER. THE LAST STEP SHALL BE NOT MORE THAN 2' ABOVE THE LEDGE AT THE SIDE OF THE MANHOLE FLOOR.
6. "T" SHALL BE 8 INCHES FOR VALUES OF "H" TO 8 FEET. "T" SHALL BE 10 INCHES FOR VALUE OF "H" OVER 8 FEET.
7. ALL REINFORCING STEEL SHALL HAVE 1-1/2 INCHES CLEAR FROM FACE OF CONCRETE.
8. FLOOR OF MANHOLE SHALL BE STEEL TROWELED.
9. RINGS, REDUCER AND PIPE FOR ACCESS SHAFT SHALL BE SEATED IN 1:2 MORTAR AND NEATLY POINTED OR WIPED INSIDE THE SHAFT.
10. LEDGE SHALL BE SLOPED AT 2 INCHES PER FOOT.
11. CONCRETE : f'c = 3250 p.s.i. AT 28 DAYS.

JUNCTION STRUCTURE No. I

MARK CARROLL, R.C.E. 31515
CITY OF IRVINE - CITY ENGINEER

AUGUST 2013
DATE

STD. PLAN 306A

SHEET 1 OF 1

CITY OF IRVINE
PUBLIC WORKS

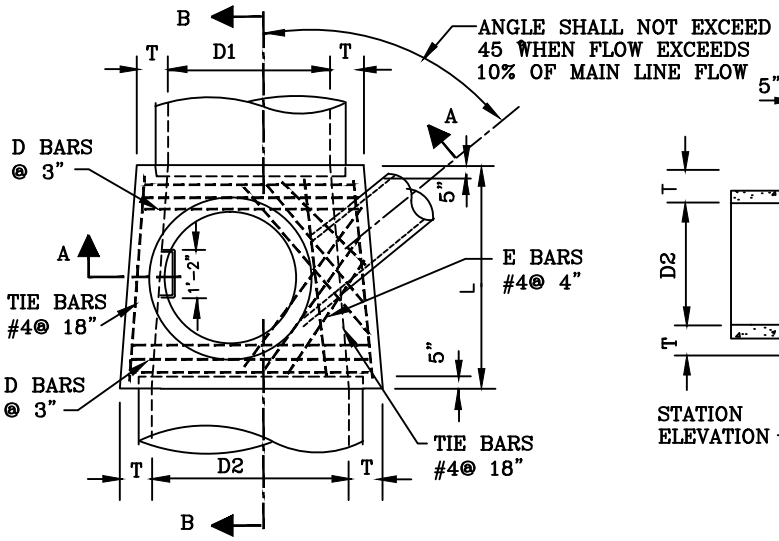

PLAN

(SHAFT NOT SHOWN)

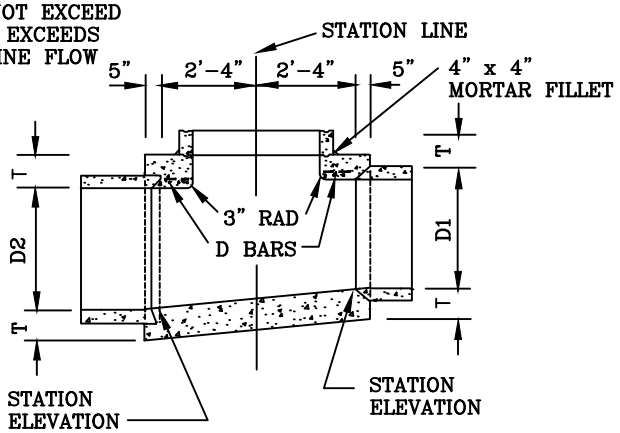

SECTION B–B

TABLE OF VALUES FOR T	
D2	T
42"	8"
45"	8"
48"	8"
51"	8–1/2"
54"	9"
57"	9–1/4"
60"	9–1/2"
63"	10"
66"	10–1/4"
69"	10–3/4"
72"	11"
78"	11–3/4"
84"	12–1/2"
90"	13–1/4"
96"	14"

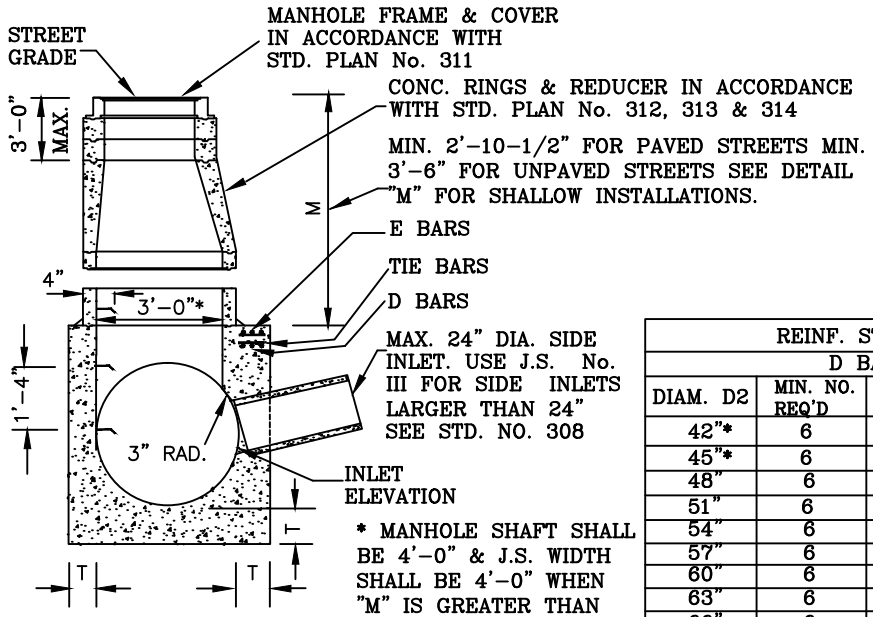

SECTION A–A

* MANHOLE SHAFT SHALL BE 4'–0" & J.S. WIDTH SHALL BE 4'–0" WHEN "M" IS GREATER THAN 20'. ALSO USE 6" THICK RINGS IN ACCORDANCE WITH STD. PLAN No. 313 & 314

REINF. STEEL TABLE FOR JUNCTION STRUCTURE No. II						
D BARS				E BARS		
DIAM. D2	MIN. NO. REQ'D	SIZE	LENGTH	MIN. NO. REQ'D	SIZE	LENGTH
42"*	6	#5	4'–6"	4	#4	3'–2"
45"*	6	#5	4'–10"	4	#4	3'–5"
48"	6	#5	5'–1"	4	#4	3'–7"
51"	6	#5	5'–5"	6	#4	4'–9"
54"	6	#5	5'–9"	6	#4	5'–1"
57"	6	#5	6'–1"	6	#4	5'–6"
60"	6	#5	6'–4"	6	#4	5'–11"
63"	6	#5	6'–8"	6	#4	6'–3"
66"	6	#5	7'–0"	8	#4	6'–8"
69"	6	#5	7'–4"	8	#4	6'–8"
72"	6	#5	7'–7"	8	#4	6'–8"
78"	6	#5	8'–3"	8	#4	6'–8"
84"	6	#5	8'–10"	10	#4	6'–8"
90"	6	#6	9'–6"	10	#4	6'–8"
96"	6	#6	10'–1"	10	#4	6'–8"

NOTES:
1. SEE STD. No. 307A FOR NOTES AND OTHER DETAILS.
2. USE JUNCTION STRUCTURE No. II FOR MANLINE PIPE 42 INCH DIA. OR LARGER.

JUNCTION STRUCTURE No. II

MARK CARROLL, R.C.E. 31515
CITY OF IRVINE - CITY ENGINEER

AUGUST 2013
DATE

STD. PLAN 307

SHEET 1 OF 1

CITY OF IRVINE
PUBLIC WORKS

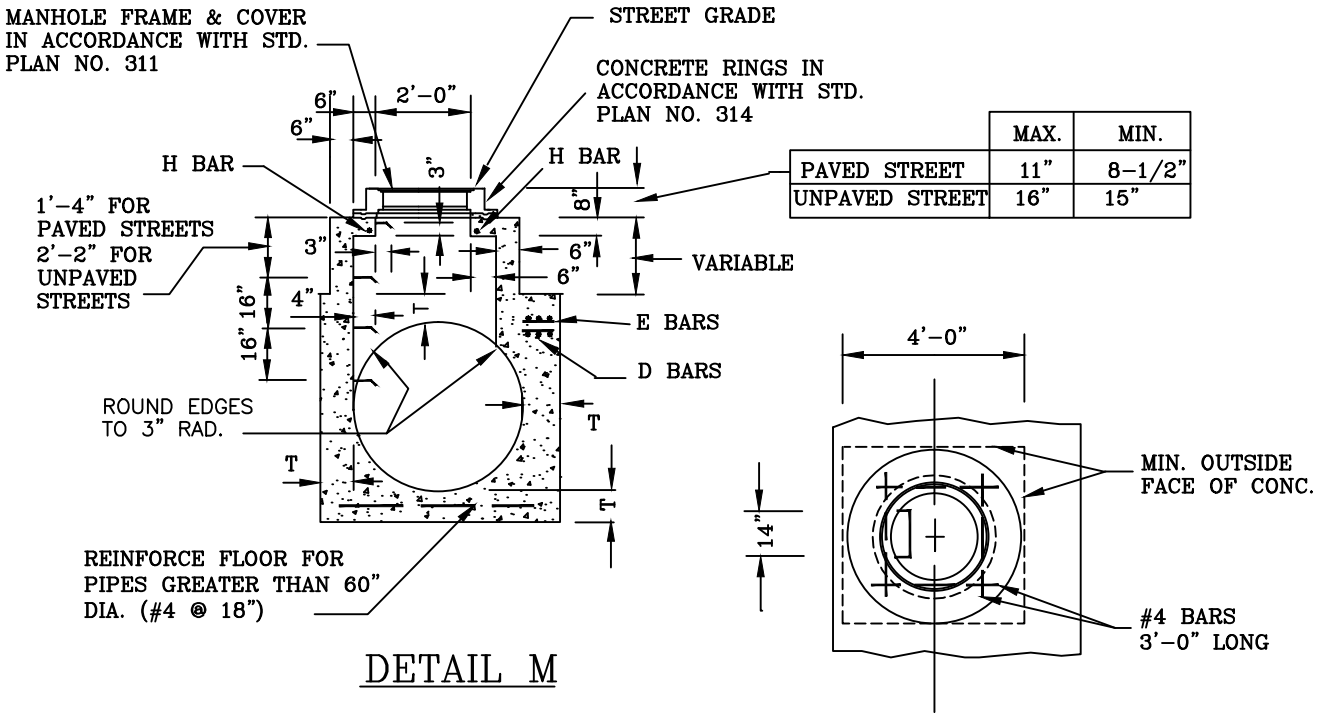

	MAX.	MIN.
PAVED STREET	11"	8-1/2"
UNPAVED STREET	16"	15"

DETAIL M

NOTES:

1. CENTER OF MANHOLE SHAFT SHALL BE LOCATED OVER CENTERLINE OF STORM DRAIN WHEN DIAMETER D1 IS 48 INCHES OR LESS, IN WHICH CASE PLACE "E" BAR SYMMETRICALLY AROUND SHAFT WITH 45° WITH CENTERLINE.
2. LENGTH "L" SHALL BE 5'-6" UNLESS OTHERWISE SHOWN ON PLANS. WHEN "L" IS SPECIFIED ON PLANS TO BE GREATER THAN 5'-6" CONTINUE "D" BARS AT 6 INCHES O.C.
3. LENGTHS SHOWN IN STEEL TABLE ARE FOR THE LONGEST BARS. WHERE SHORTER BARS ARE REQUIRED, BEND OR CUT BARS AS REQUIRED.
4. USE DETAIL "M" WHEN DEPTH OF MANHOLE FROM STREET GRADE TO TOP OF BOX IS LESS THAN SHOWN ON SECTION A-A BY CONSTRUCTING MONOLITHIC SHAFT AS SHOWN IN DETAIL. WHEN D1 IS LESS THAN 48 INCHES SEE NOTE NO. 1.
5. THICKNESS OF DECK SHALL VARY WHEN NECESSARY TO PROVIDE A LEVEL PIPE SEAT, BUT SHALL NOT BE LESS THAN VALUES FOR "T" SHOWN IN TABLE.
6. REINFORCING STEEL SHALL HAVE 1-1/2 INCHES CLEAR FROM FACE OF CONCRETE.
7. STEPS SHALL BE 3/4 INCH ROUND GALVANIZED STEEL AND ANCHORED NOT LESS THAN 6 INCHES IN THE WALLS OF THE STRUCTURE. SPACING SHALL BE 1-4 INCHES ON CENTER. THE LOWEST STEP SHALL BE NOT MORE THAN 2'-0" ABOVE THE INVERT.
8. RINGS, REDUCER, AND PIPE FOR ACCESS SHAFT SHALL BE SEATED IN 1:2 MORTAR AND NEATLY POINTED OR WIPED INSIDE THE SHAFT.
9. FLOOR OF MANHOLE SHALL BE STEEL TROWELED TO SPRING LINE.
10. BODY OF MANHOLE SHALL BE CONSTRUCTED IN ONE CONTINUOUS OPERATION, EXCEPT THE CONTRACTOR SHALL HAVE THE OPTION OF PLACING A CONSTRUCTION JOINT WITH A LONGITUDINAL KEYWAY AT THE SPRING LINE.
11. CONCRETE: F'C = 3250 P.S.I. AT 28 DAYS.

JUNCTION STRUCTURE No. II

MARK CARROLL, R.C.E. 31515
CITY OF IRVINE - CITY ENGINEER

AUGUST 2013
DATE

STD. PLAN 307A

SHEET 1 OF 1

CITY OF IRVINE
PUBLIC WORKS

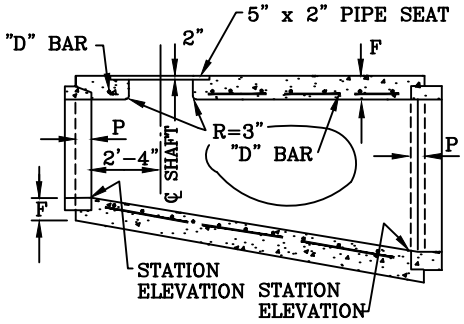

LOGITUDINAL SECTION

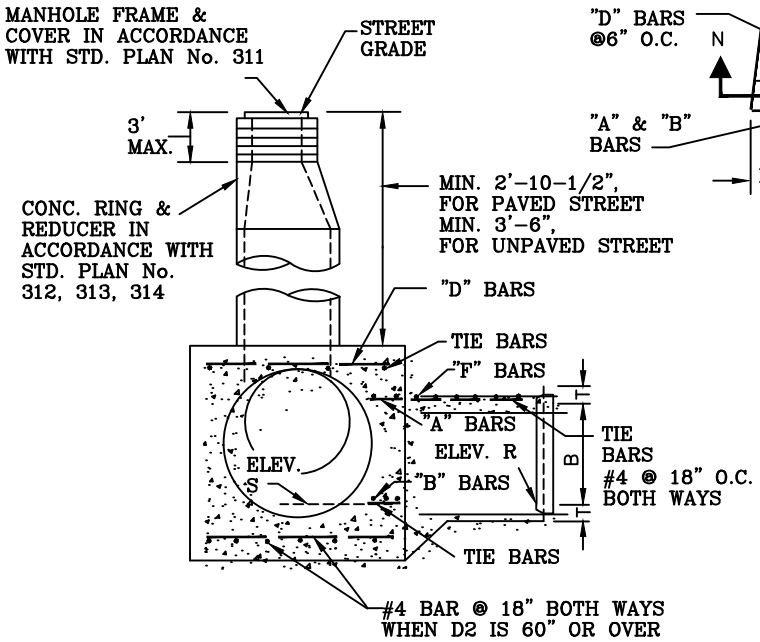

SECTION N-M-P-O

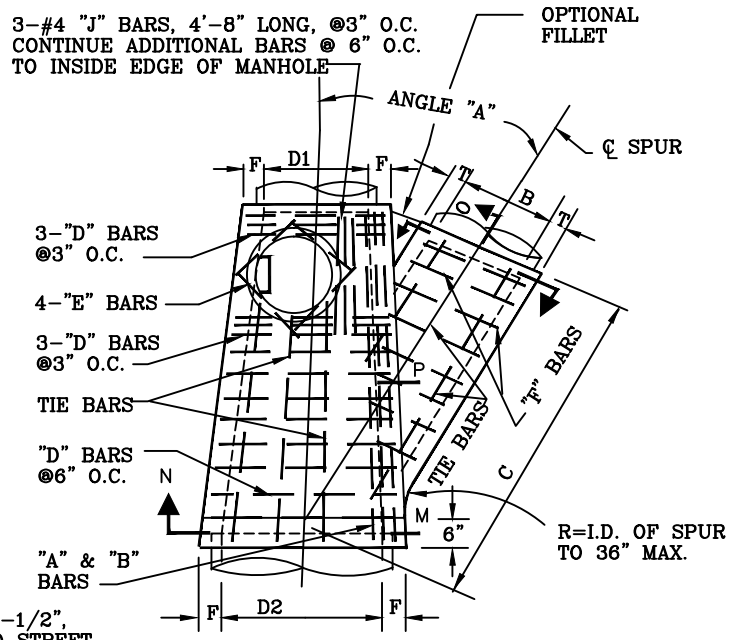

PLAN

SHAFT NOT SHOWN

TABLE OF VALUE FOR F AND T			
D2	F	B	T
36"	8"	24"	5-1/4"
39"	8"	27"	5-1/2"
42"	8"	30"	6"
45"	8"	33"	6-1/4"
48"	8"	36"	6-1/2"
51"	8-1/2"	39"	7"
54"	9"	42"	7-1/2"
57"	9-1/4"	45"	7-3/4"
60"	9-1/2"	48"	8"
63"	10"	51"	8-1/2"
66"	10-1/4"	54"	9"
69"	10-3/4"	57"	9-1/4"
72"	11"	60"	9-1/2"
78"	11-3/4"	63"	10"
84"	12-1/2"	66"	10-1/2"
90"	13-1/4"	69"	10-3/4"
96"	14"	72"	11"

TABLE OF BAR SIZES PROJECTED ON N-M-P-O		
D2 OR B	A & B BARS	D & F BARS
24"-39'	#5 @ 3"	#4 @ 6"
42"-84"	#6 @ 3"	#5 @ 6"
90"-96"	#7 @ 3"	#6 @ 6"

NOTES:

1. USE JUNCTION STRUCTURE No. III FOR INLET PIPES LARGER THAN 24 INCHES.
2. SEE STD. PLAN No. 308A FOR NOTES AND OTHER DETAILS.

JUNCTION STRUCTURE No. III

MARK CARROLL, R.C.E. 31515
CITY OF IRVINE - CITY ENGINEER

AUGUST 2013
DATE

STD. PLAN 308

SHEET 1 OF 1

CITY OF IRVINE
PUBLIC WORKS

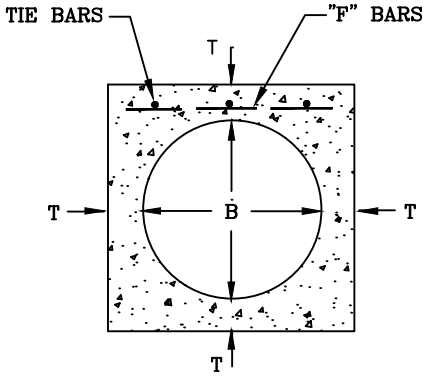

SECTION G–G

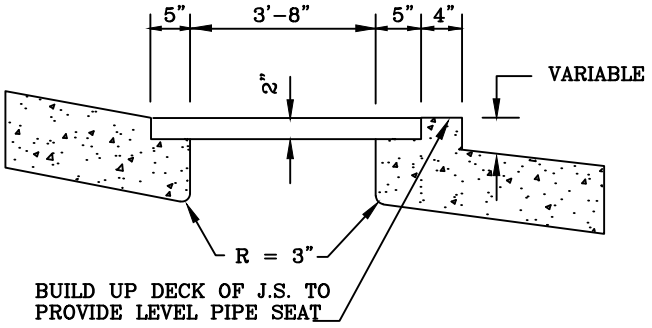

SHAFT SEAT DETAIL

NOTES:

1. VALUE FOR "A", "B', "C", "D1", "D2", ELEVATION "R" AND ELEVATION "S" ARE SHOWN ON PLANS.
2. IF LATERALS ENTER BOTH SIDES OF JUNCTION STRUCTURE, THE ACCESS SHAFT SHALL BE LOCATED ON THE SIDE RECEIVING THE SMALLER LATERAL.
3. CENTER OF MANHOLE SHAFT SHALL BE LOCATED OVER THE CENTERLINE OF THE STORM DRAIN WHEN D1 IS 48 INCHES OR LESS, IN THIS CASE PLACE 4–"E" BARS (#4) SYMMETRICALLY AROUND THE SHAFT AT 45° WITH THE CENTERLINE.
4. LENGTH OF JUNCTION STRUCTURE CAN BE INCREASED AT CONTRACTOR'S OPTION TO MEET PIPE ENDS, BUT ANY CHANGE IN LOCATION OF THE SPUR MUST BE APPROVED BY THE CITY ENGINEER.
5. THE STATION POINT, AS SHOWN ON THE PLANS, IS DEFINED AS THE INTERSECTION OF THE CENTERLINE OF THE MAIN LINE AND THE CENTERLINE OF THE SPUR.
6. USE DETAIL "M" OF STANDARD No. 307A WHEN DEPTH OF THE SHAFT FROM STREET GRADE TO THE TOP OF THE JUNCTION STRUCTURE IS LESS THAN 2'–10–1/2" FOR PAVED STREETS OR 3'–6" FOR UNPAVED STREETS. CONSTRUCT MONOLITHIC SHAFT AS SHOWN ON DETAIL "M". CONSTRUCTION OF MANHOLE SHAFT PER DETAIL "M" FOR ANY DEPTH OF MANHOLE IS OPTIONAL. WHEN D1 IS 48 INCHES OR LESS SEE NOTE 3.
7. REINFORCING STEEL SHALL BE 1–1/2 INCHES CLEAR FROM FACE OF CONCRETE. TIE BARS SHALL BE #4 @ 18 INCHES MAX.
8. EMBEDMENT "P" SHALL BE 5 INCHES FOR D2 TO 96 INCHES OR LESS AND 8 INCHES FOR D2 OVER 96 INCHES.
9. STEP SHALL BE 3/4 INCH/O GALVANIZED STEEL, AND ANCHORED NOT LESS THAN 6 INCHES IN THE WALLS OF THE STRUCTURE. STEP SPACING SHALL BE 1'–4" WITH THE LOWEST STEP NOT MORE THAN 2 FEET ABOVE THE INVERT.
10. RING, REDUCER AND PIPE FOR ACCESS SHAFT SHALL BE SEATED IN 1:2 MIX MORTAR AND NEATLY POINTED OR WIPED INSIDE THE SHAFT.
11. FLOOR OF JUNCTION STRUCTURE SHALL BE STEEL TROWELED TO THE SPRING LINE.
12. BODY OF JUNCTION STRUCTURE, INCLUDING SPUR, SHALL BE CONSTRUCTED IN ONE, CONTINUOUS OPERATION, EXCEPT THAT A CONSTRUCTION JOINT AT THE SPRING LINE, WITH A LONGITUDINAL KEYWAY, IS OPTIONAL.
13. ELEVATION "S" APPLIES AT THE CENTERLINE OF THE MAIN LINE ON THE PROLONGATION OF THE INVERT OF THE SPUR.
14. CONCRETE: f'c = 3250 PSI AT 28 DAYS.

JUNCTION STRUCTURE No. III

MARK CARROLL, R.C.E. 31515
CITY OF IRVINE - CITY ENGINEER

AUGUST 2013
DATE

STD. PLAN 308A

SHEET 1 OF 1

CITY OF IRVINE

PUBLIC WORKS

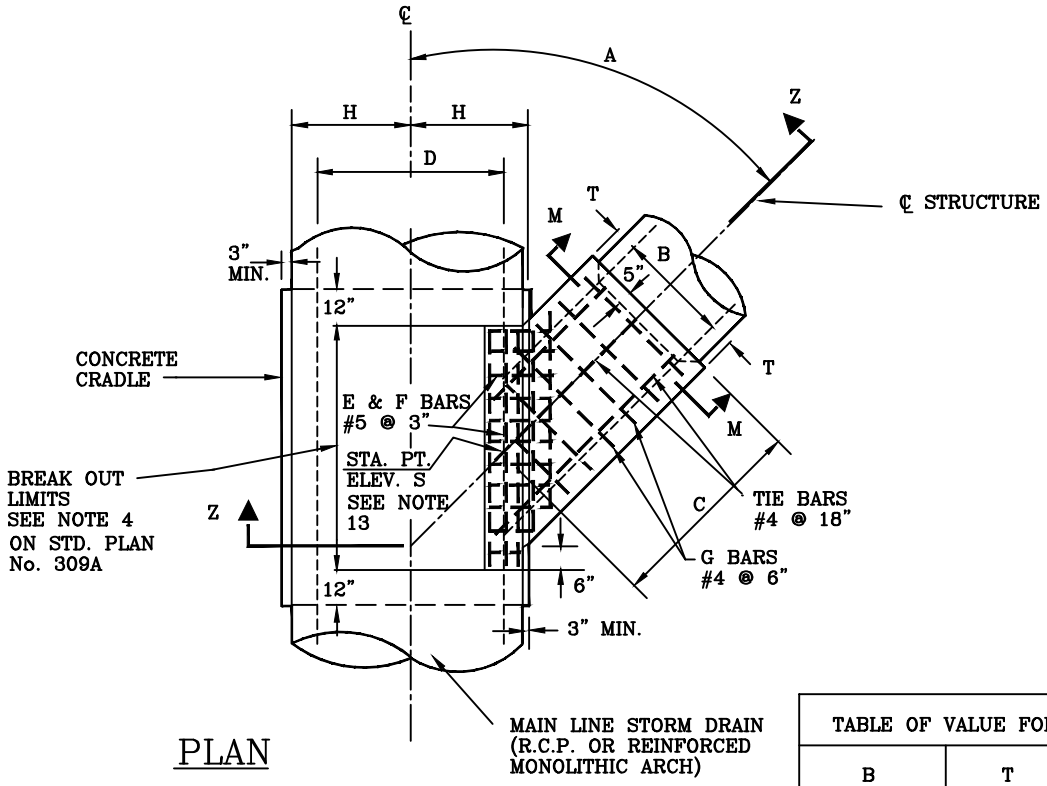

PLAN

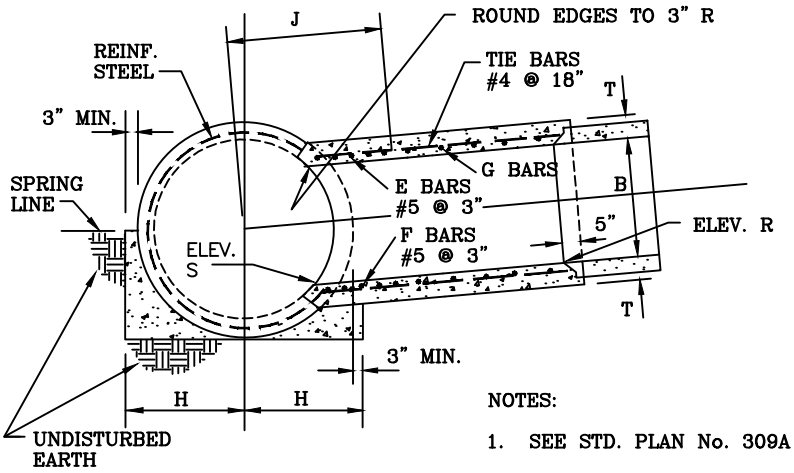

SECTION Z–Z

TABLE OF VALUE FOR T	
B	T
12"	6"
15"	6"
18"	6"
21"	6"
24"	7"
27"	7"
30"	7"
33"	7"
36"	7"
39"	7"

NOTES:

1. SEE STD. PLAN No. 309A FOR NOTES AND OTHER DETAILS.
2. USE JUNCTION STRUCTURE No. IV WHEN O.D. OF "B" > 1/2 THE I.D. OF "D", MAXIMUM "B" = 39 INCHES.

JUNCTION STRUCTURE No. IV

MARK CARROLL, R.C.E. 31515
CITY OF IRVINE - CITY ENGINEER

AUGUST 2013
DATE

STD. PLAN 309

SHEET 1 OF 1

CITY OF IRVINE
PUBLIC WORKS

SECTION M–M

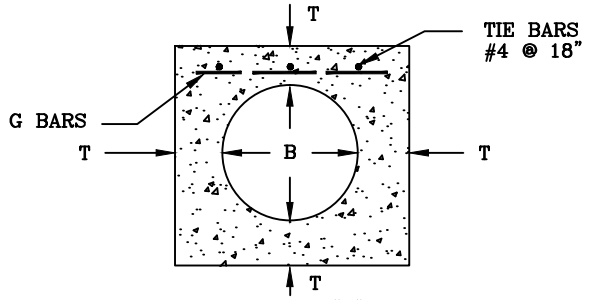

NOTES:

1. JUNCTION STRUCTURE No. IV IS TO BE USED WHEN O.D. OF "B" IS GREATER THAN 1/2 THE I.D. OF "D", OR "B" IS GREATER THAN 24 INCHES. "B" SHALL NOT EXCEED 3/4 "D" OR 39 INCHES. NO MORE THAN ONE OPENING SHALL BE MADE IN ONE SECTION OF PIPE.
2. VALUE OF A,B,C, AND D ARE SHOWN ON PROJECT DRAWINGS. ELEVATION "R" AND ELEVATION "S" ARE SHOWN WHEN REQUIRED PER NOTE 12.
3. ELEVATION "S" APPLIES AT INSIDE WALL OF STRUCTURE.
4. BREAKOUT LIMITS SHALL BE DETERMINED AS FOLLOWS:
   UPSTREAM LIMIT – THE INTERSECTION OF THE OUTSIDE OF THE SPUR WALL WITH THE MAIN LINE PIPE WALL.
   DOWNSTREAM LIMIT – 6 INCHES DOWNSTREAM OF THE INTERSECTION OF THE OUTSIDE OF THE SPUR WALL WITH THE MAIN LINE PIPE WALL.
   THE OPENING SHALL BE RECTANGULAR AND CUT NORMAL TO THE PIPE SURFACE WITHOUT DAMAGING REINFORCING STEEL. PROVIDE A CONCRETE ENCASEMENT 1' ABOVE THE TOP OF THE MAIN LINE PIPE TO THE LIMITS OF THE CONCRETE CRADLE, IF A JOINT IN THE MAIN LINE PIPE FALLS WITHIN THE LIMITS OF THE CRADLE.
5. THE TRANSVERSE REINFORCEMENT IN PIPE SHALL BE CUT AT CENTER OF OPENING AND BENT INTO TOP AND BOTTOM SLABS OF SPUR.
6. THE MAIN LINE PIPE SHALL BE CRADLED AND ENCASED IN CONCRETE IN ACCORDANCE WITH STANDARD PLAN No. 405, EXTENDING LONGITUDINALLY 12 INCHES BEYOND THE LIMITS OF BREAKOUT (SEE NOTE 4). CRADLE MAY BE OMITTED ON SIDE OPPOSITE LATERAL INLET WHEN CONSTRUCTED IN CONNECTION WITH EXISTING STORM DRAIN.
7. REINFORCING STEEL SHALL BE PLACED 1–1/2 INCHES CLEAR FROM FACE OF CONCRETE, UNLESS OTHERWISE SHOWN.
8. E AND F BARS SHALL BE CARRIED TO A POINT NOT LESS THAN J DISTANCE FROM CENTERLINE. J = 7/12 D + 6 INCHES.
9. CONCRETE f'c = 3250 PSI AT 28 DAYS.
10. FLOOR OF STRUCTURE SHALL BE STEEL TROWELED TO SPRING LINE.
11. WHEN JUNCTION STRUCTURE No. IV IS SPECIFIED WITH REINFORCED MONOLITHIC ARCH STORM DRAIN, VALUE D SHALL REFER TO THE CLEAR SPAN OF THE ARCH. REINFORCING STEEL SHALL BE CUT AND BENT INTO JUNCTION STRUCTURE IN THE SAME MANNER AS FOR PIPE. CONCRETE CRADLE UNDER REINFORCED MONOLITHIC ARCH IS NOT REQUIRED.
12. INLET PIPE SHALL ENTER MAIN LINE RADIALLY WHEN ELEVATIONS "R" AND "S" ARE NOT SHOWN ON PROJECT DRAWINGS, AND INLET PIPE SHALL BE LAID ON A STRAIGHT GRADE FROM ELEVATION "S" TO CATCH BASIN OR GRADE BREAK IN LINE. ELEVATION "R" SHALL BE SHOWN ON PROJECT DRAWINGS ONLY WHEN STUB IS TO BE PROVIDED IN MAIN LINE FOR FUTURE INLET PIPE.
13. STATIONS SPECIFIED ON DRAWINGS APPLY AT THE INTERSECTION OF CENTERLINES OF MAIN LINE AND LATERALS, EXCEPT THAT STATIONS FOR CATCH BASIN CONNECTOR PIPE APPLY AT INSIDE OF STRUCTURE.
14. JUNCTION STRUCTURE No. IV SHALL NOT BE USED WHEN ASBESTOS CEMENT PIPE IS USED FOR MAIN LINE.
15. JUNCTION STRUCTURE No. IV SHALL BE USED ONLY WHEN SUFFICIENT MEANS OF ACCESS IS AVAILABLE FOR STORM DRAIN MAINTENANCE.
16. MANHOLE MUST BE LOCATED WITHIN 50 FEET OF THIS JUNCTION STRUCTURE.

JUNCTION STRUCTURE No. IV

MARK CARROLL, R.C.E. 31515
CITY OF IRVINE - CITY ENGINEER

AUGUST 2013
DATE

STD. PLAN 309A

SHEET 1 OF 1

CITY OF IRVINE
PUBLIC WORKS

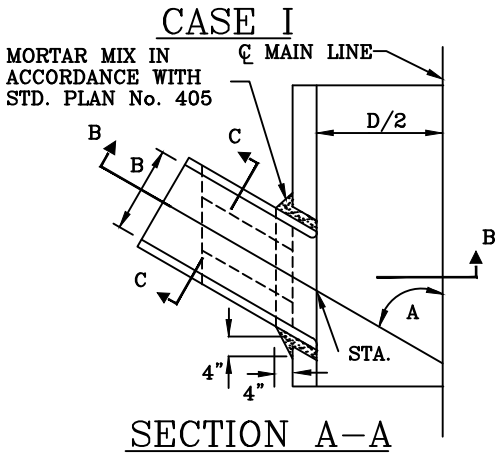

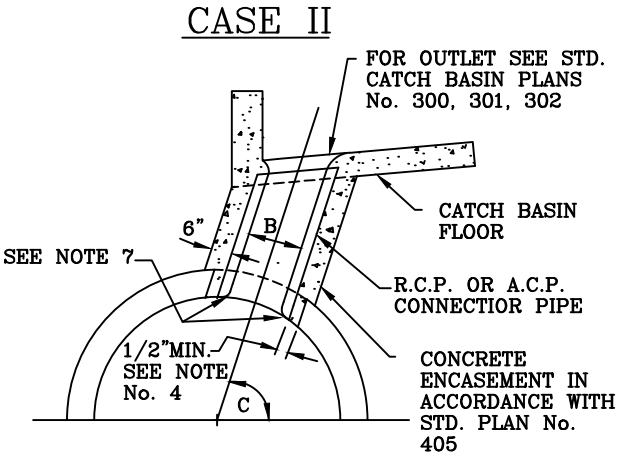

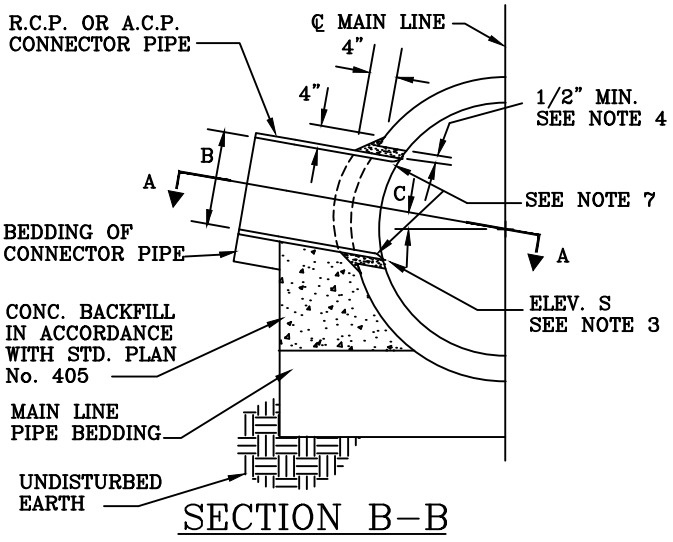

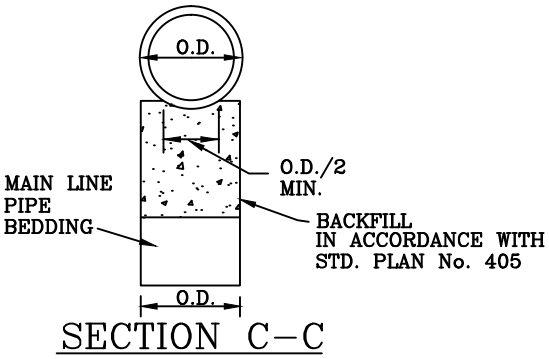

NOTES:

1. ANGLE A SHALL BE BETWEEN 45° & 90° AND B SHALL BE 24" OR LESS.
2. IN NO CASE SHALL THE O.D. OF INLET PIPE EXCEED 1/2 THE I.D. OF THE MAIN LINE.
3. CENTER LINE OF INLET SHALL BE ON RADIUS OF MAIN LINE EXCEPT WHERE ELEV. S IS SHOWN ON PROJECT DRAWINGS.
4. THE OPENING INTO THE MAIN LINE SHALL BE THE O.D. OF INLET PIPE PLUS 1 INCH MINIMUM TO 3 INCHES MAXIMUM.
5. IF ANGLE C IS 45° OR LESS, USE CASE I. IF ANGLE C IS GREATER THAN 45, USE CASE II.
6. ALL CONNECTOR PIPES WITHIN THE ANGLES SPECIFIED FOR CASE II, SHALL BE ENCASED WITH CONCRETE MIX IN ACCORDANCE WITH STD. PLAN No. 405.
7. BURN OR CHIP END OF CONNECTOR PIPE FLUSH WITH THE INNER SURFACE OF MAIN LINE PIPE. ROUND EDGE OF R.C.P.
8. STATION SPECIFIED ON PLANS APPLIES AT THE INTERSECTION OF THE INSIDE WALL OF MAIN LINE PIPE AND THE CENTER LINE OF CONNECTOR PIPE.
9. MANHOLE MUST BE LOCATED WITHIN 50 FEET, TO USE THIS TYPE OF JUNCTION.

JUNCTION STRUCTURE No. V

MARK CARROLL, R.C.E. 31515
CITY OF IRVINE - CITY ENGINEER

AUGUST 2013
DATE

STD. PLAN 309B

SHEET 1 OF 1

CITY OF IRVINE
PUBLIC WORKS

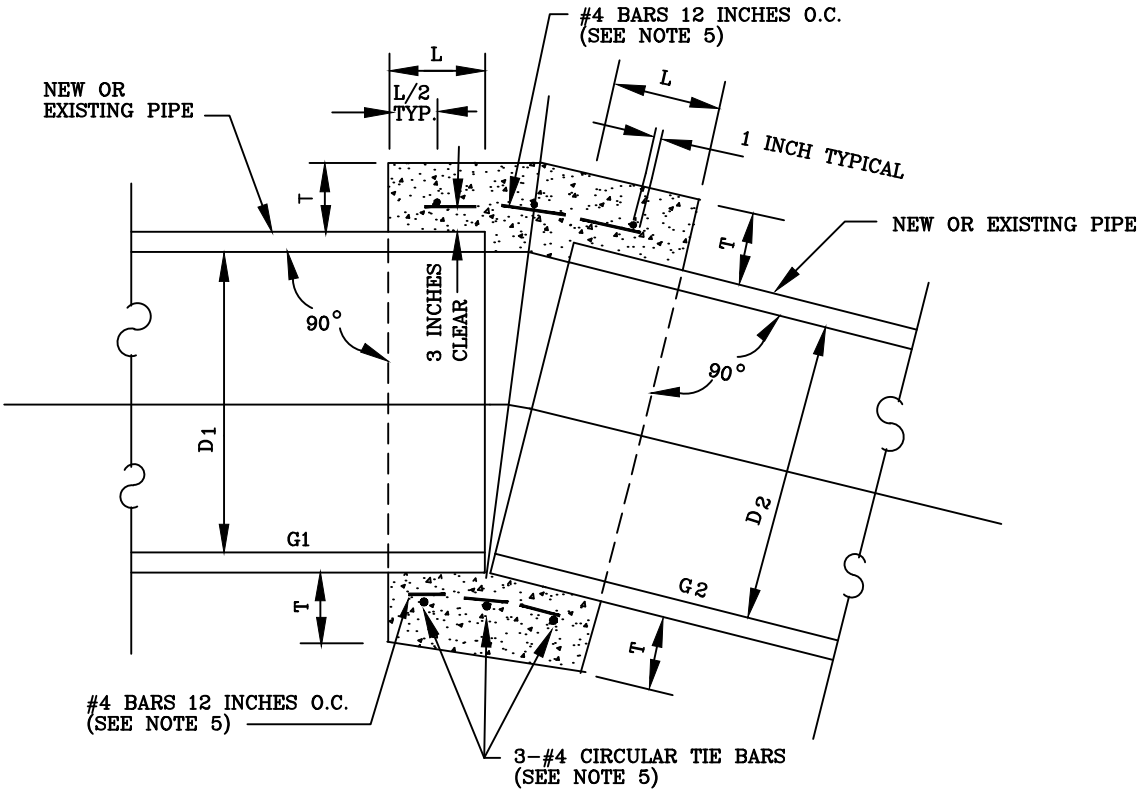

D	12"	18"	24"	30"	36"	42"	48"	54"	60"	66"
L	1.0'	1.0'	1.0'	1.25'	1,5'	1.5'	1.5'	1.75'	1.75'	1.75'
T	4"	5"	6"	7"	8"	9"	10"	10"	11"	11"
A	.08	.067	.052	.042	.036	.040	.036	.032	.028	.026

G = SLOPE OF PIPE
FT./FT.

NOTES:

1. A CONCRETE COLLAR IS REQUIRED WHERE $G_2 - G_1 > A$
2. WHERE PIPES OF DIFFERENT DIAMETERS ARE JOINED WITH A CONCRETE COLLAR, L AND T SHALL BE THOSE OF THE LARGER PIPE $D = D_1$ OR D_2 , WHICHEVER IS GREATER.
3. FOR PIPE LARGER THAN 66 INCHES A SPECIAL COLLAR DETAIL IS REQUIRED.
4. FOR PIPE SIZE NOT LISTED USE NEXT SIZE LARGER.
5. OMIT REINFORCING ON PIPES 24 INCHES AND LESS IN DIAMETER AND ON ALL PIPES WHERE $G_2 - G_1 < 3 \times A$.
6. WHERE REINFORCING IS REQUIRED THE DIAMETER OF THE CIRCULAR TIES SHALL BE D+(2 x WALL THICKNESS)+T.
7. WHEN D_2 IS EQUAL TO OR LESS THAN D_1, JOIN INVERTS AND WHEN D IS GREATER THAN D , JOIN SOFFITS.
8. BEVELED PIPE MAY BE USED IN LIEU OF CONCRETE COLLAR.
9. THIS CONCRETE COLLAR DETAIL SHALL NOT BE USED WHEN $G_2 - G_1 > 10\%$.

CONCRETE COLLAR

MARK CARROLL, R.C.E. 31515
CITY OF IRVINE - CITY ENGINEER

AUGUST 2013
DATE

STD. PLAN 310

SHEET 1 OF 1

CITY OF IRVINE
PUBLIC WORKS

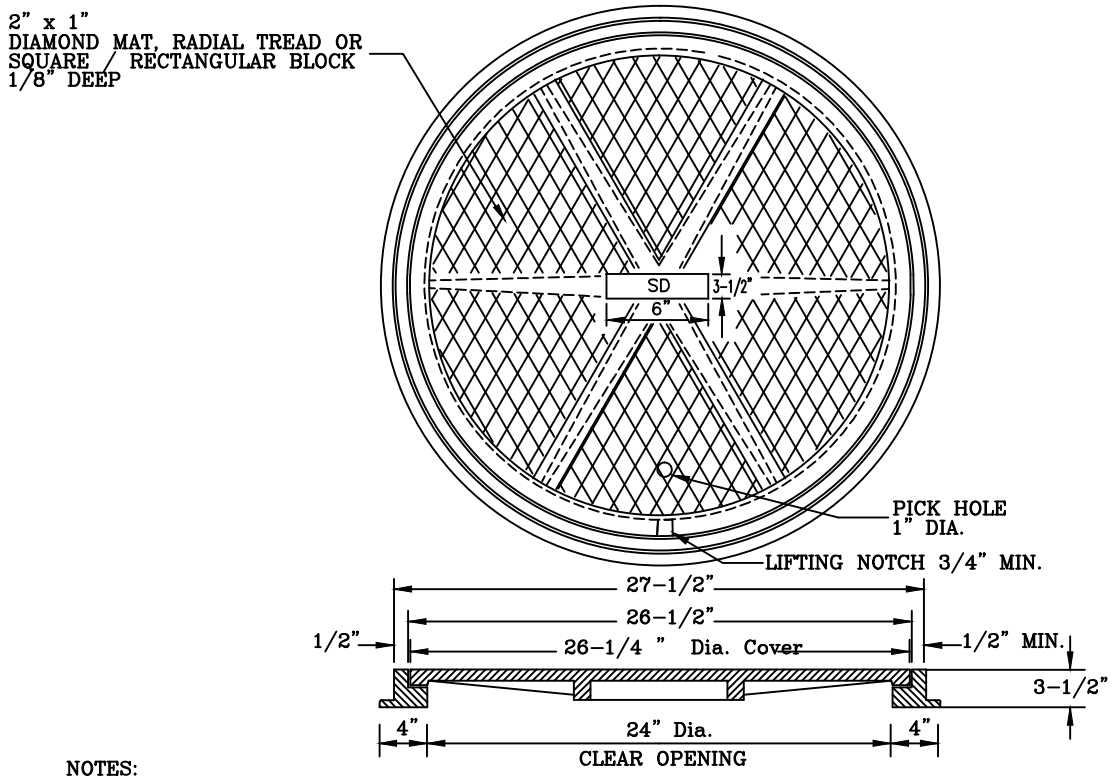

NOTES:

1. THE CAST IRON USED SHALL CONFORM TO ASTM A-48 CLASS 35B AND THE MANHOLE COVER OR RING SHALL NOT BE PAINTED. PROOF-LOAD TEST FOR METHOD "B" IS 40,000 LBS.
2. COVERS SHALL BE CAST WITH THE LETTER "SD" (2"MIN. HEIGHT) FOR STORM DRAINS.
3. FOUNDRY IDENTIFYING MARK/NAME, SHALL BE CAST ON THE TOP OF THE COVER. IMPORTED COVERS AND FRAMES SHALL HAVE THE COUNTRY OF ORIGIN MARKING ON THE TOP OF COVER AND ON THE FRAME IN COMPLIANCE WITH FEDERAL REGULATIONS.
4. FOUNDRY IDENTIFYING MARK/NAME, HEAT AND DATE SHALL BE CAST ON THE BOTTOM OF THE COVER AND ON THE INSIDE OF THE FRAME. IMPORTED COVERS AND FRAMES SHALL HAVE THE COUNTRY OF ORIGIN MARKING ON THE TOP OF COVER AND ON THE FRAME IN COMPLIANCE WITH FEDERAL REGULATIONS.
5. WEIGHT OF FRAME SHALL BE 160 LBS.
   WEIGHT OF COVER SHALL BE 155 LBS.
   ACTUAL WEIGHTS SHALL BE WITHIN A RANGE OF 95% TO 110%.
6. USE ONE OF THE FOLLOWING APPROVED PRODUCTS:
   ALHAMBRA FOUNDRY A-1254-4,
   NEENAH FOUNDRY - NFI-1593
   OR APPROVED EQUAL.
7. REQUEST FOR APPROVED EQUAL WILL REQUIRE THE FOLLOWING:
   (a) A CERTIFICATE OF COMPLIANCE STATING THAT THE FURNISHED FRAME(S) AND COVER(S) COMPLY IN ALL RESPECTS WITH THE REQUIREMENTS OF THE ABOVE SPECIFICATIONS. SUCH CERTIFICATES SHALL CLEARLY IDENTIFY THE FRAME AND COVER AND BE SIGNED BY THE MANUFACTURER.
   (b) MANHOLE FRAME(S) AND COVER(S) PRODUCED OUTSIDE THE UNITED STATES SHALL BE FURNISHED WITH A CERTIFICATE OF COMPLIANCE ALONG WITH COMPLETE COPIES OF ALL TESTS AND TEST RESULTS IN COMPLIANCE WITH APWA TEST REQUIREMENTS. THE CERTIFICATE SHALL BE ISSUED BY A PRIVATE TESTING FIRM LOCATED WITHIN CALIFORNIA AND WILL BE AT NO ADDITIONAL EXPENSE TO THE CITY OF IRVINE. THE TESTING FIRM SHALL BE EXPERIENCED AND KNOWLEDGEABLE OF THE TESTING OF MANHOLE FRAMES AND COVERS.

24" TRAFFIC MANHOLE FRAME & COVER

MARK CARROLL, R.C.E. 31515
CITY OF IRVINE - CITY ENGINEER

AUGUST 2013
DATE

STD. PLAN 311

SHEET 1 OF 3

CITY OF IRVINE
PUBLIC WORKS

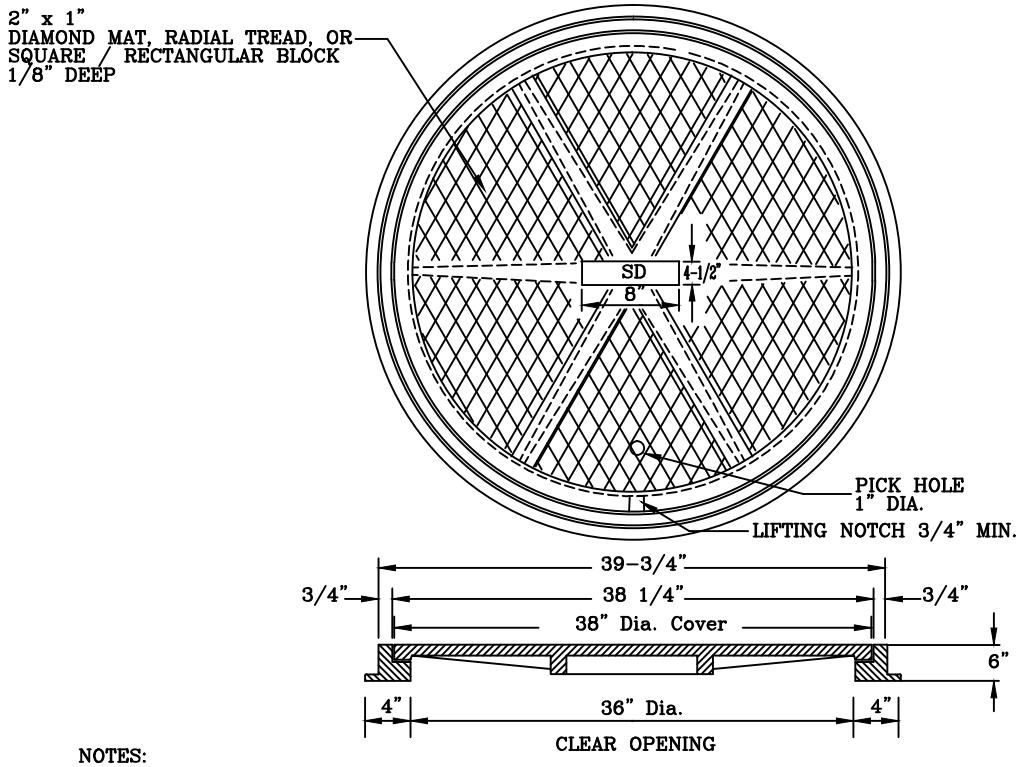

NOTES:

1. THE CAST IRON USED SHALL CONFORM TO ASTM A-48 CLASS 35B. PROOF-LOAD FOR TEST METHOD "B" IS 41,000LBS.
2. COVERS SHALL BE CAST WITH THE LETTER "SD" (3" MIN. HEIGHT) FOR STORM DRAINS.
3. FOUNDRY IDENTIFYING ID#/NAME, SHALL BE CAST ON THE TOP OF THE COVER. IMPORTED COVERS AND FRAMES SHALL HAVE THE COUNTRY OF ORIGIN MARKING ON THE TOP OF COVER AND ON THE FRAME IN COMPLIANCE WITH FEDERAL REGULATIONS.
4. FOUNDRY IDENTIFYING ID#/NAME, HEAT AND DATE SHALL BE CAST ON THE BOTTOM OF THE COVER AND ON THE INSIDE OF THE FRAME. IMPORTED COVERS AND FRAMES SHALL HAVE THE COUNTRY OF ORIGIN MARKING ON THE TOP OF COVER AND ON THE FRAME IN COMPLIANCE WITH FEDERAL REGULATIONS.
5. WEIGHT OF FRAME SHALL BE 300 LBS.
   WEIGHT OF COVER SHALL BE 335 LB..
   ACTUAL WEIGHTS SHALL BE WITHIN A RANGE OF 95% TO 110%.
6. USE ONE OF THE FOLLOW APPROVED PRODUCTS:
   ALHAMBRA FOUNDRY A-1251-6,
   NEENAH FOUNDRY NFI-1739-B,
   OR APPROVED EQUAL.
7. REQUEST FOR APPROVED EQUAL WILL REQUIRE THE FOLLOWING:
   (a) A CERTIFICATE OF COMPLIANCE STATING THAT THE FURNISHED FRAME(S) AND COVER(S) COMPLY IN ALL RESPECTS WITH THE REQUIREMENTS OF THE ABOVE SPECIFICATIONS. SUCH CERTIFICATES SHALL CLEARLY IDENTIFY THE FRAME AND COVER AND BE SIGNED BY THE MANUFACTURER.
   (b) MANHOLE FRAME(S) AND COVER(S) PRODUCED OUTSIDE THE UNITED STATES SHALL BE FURNISHED WITH A CERTIFICATE OF COMPLIANCE ALONG WITH COMPLETE COPIES OF ALL TESTS AND TEST RESULTS IN COMPLIANCE WITH APWA TEST REQUIREMENTS. THE CERTIFICATE SHALL BE ISSUED BY A PRIVATE TESTING FIRM LOCATED WITHIN CALIFORNIA AND WILL BE AT NO ADDITIONAL EXPENSE TO THE CITY OF IRVINE. THE TESTING FIRM SHALL BE EXPERIENCED AND KNOWLEDGEABLE OF THE TESTING OF MANHOLE FRAMES AND COVERS.

36" TRAFFIC MANHOLE FRAME AND COVER

MARK CARROLL, R.C.E. 31515
CITY OF IRVINE - CITY ENGINEER

AUGUST 2013
DATE

STD. PLAN 311

CITY OF IRVINE
PUBLIC WORKS

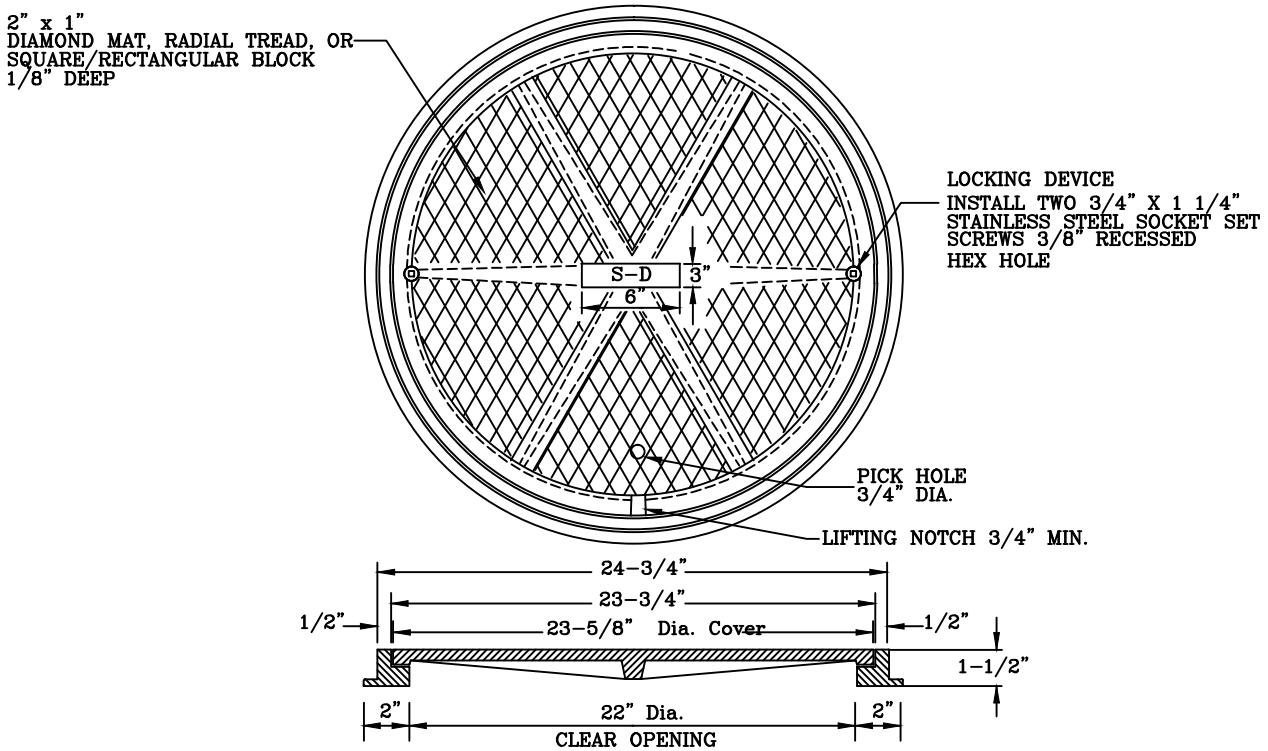

NOTES:

1. THE CAST IRON USED SHALL CONFORM TO ASTM A-48 CLASS 35B. PROOF-LOAD FOR TEST METHOD "B" IS 28,600 LBS.
2. COVERS SHALL BE CAST WITH THE LETTER "S-D" (1" MIN. HEIGHT) FOR STORM DRAINS.
3. FOUNDRY IDENTIFYING ID#/NAME, SHALL BE CAST ON THE TOP OF THE COVER. IMPORTED COVERS AND FRAMES SHALL HAVE THE COUNTRY OF ORIGIN MARKING ON THE TOP OF COVER AND ON THE FRAME IN COMPLIANCE WITH FEDERAL REGULATIONS.
4. FOUNDRY IDENTIFYING ID#/NAME, HEAT AND DATE SHALL BE CAST ON THE BOTTOM OF THE COVER AND ON THE INSIDE OF THE FRAME. IMPORTED COVERS AND FRAMES SHALL HAVE THE COUNTRY OF ORIGIN MARKING ON THE TOP OF COVER AND ON THE FRAME IN COMPLIANCE WITH FEDERAL REGULATIONS.
5. WEIGHT OF FRAME SHALL BE 30 LBS.
   WEIGHT OF COVER SHALL BE 100 LBS.
   ACTUAL WEIGHTS SHALL BE WITHIN A RANGE OF 95% TO 110%.
6. USE ONE OF THE FOLLOWING APPROVED PRODUCTS:
   ALHAMBRA FOUNDRY A-1530-B (GALVANIZED),
   NEENAH FOUNDRY NFI-1579 (GALVANIZED),
   OR APPROVED EQUAL WITH LOCKING DEVICE.
7. REQUEST FOR APPROVED EQUAL WILL REQUIRE THE FOLLOWING:
   (a) A CERTIFICATE OF COMPLIANCE STATING THAT THE FURNISHED FRAME(S) AND COVER(S) COMPLY IN ALL RESPECTS WITH THE REQUIREMENTS OF THE ABOVE SPECIFICATIONS. SUCH CERTIFICATES SHALL CLEARLY IDENTIFY THE FRAME AND COVER AND BE SIGNED BY THE MANUFACTURER.
   (b) MANHOLE FRAME(S) AND COVER(S) PRODUCED OUTSIDE THE UNITED STATES SHALL BE FURNISHED WITH A CERTIFICATE OF COMPLIANCE ALONG WITH COMPLETE COPIES OF ALL TESTS AND TEST RESULTS IN COMPLIANCE WITH APWA TEST REQUIREMENTS. THE CERTIFICATE SHALL BE ISSUED BY A PRIVATE TESTING FIRM LOCATED WITHIN CALIFORNIA AND WILL BE AT NO ADDITIONAL EXPENSE TO THE CITY OF IRVINE. THE TESTING FIRM SHALL BE EXPERIENCED AND KNOWLEDGEABLE OF THE TESTING OF MANHOLE FRAMES AND COVERS.

22" PARKWAY MANHOLE FRAME AND COVER

MARK CARROLL, R.C.E. 31515
CITY OF IRVINE - CITY ENGINEER

AUGUST 2013
DATE

STD. PLAN 311

SHEET 3 OF 3

CITY OF IRVINE

PUBLIC WORKS

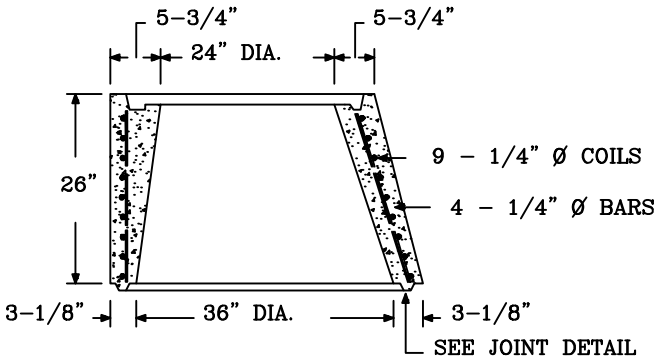

36" TO 24" ECCENTRIC CONE

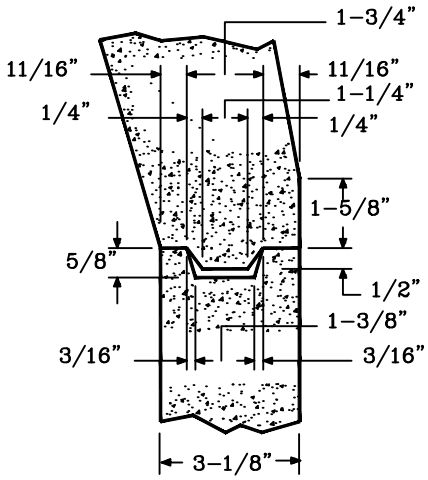

JOINT DETAIL

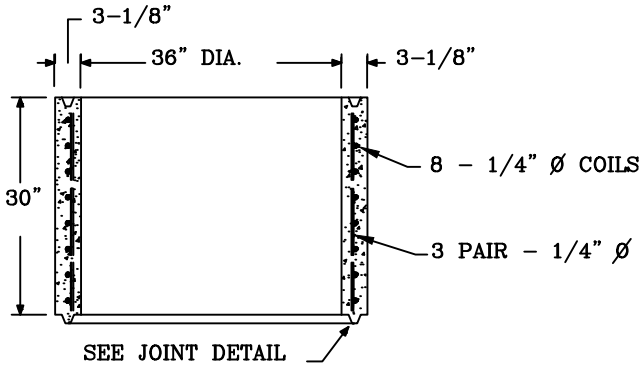

36" X 30" MANHOLE PIPE

NOTES:

1. SEE STD. PLAN No. 311 FOR FRAME & COVER.
2. SEE STD. PLAN No's. 306–308 & 306A–308A FOR MANHOLE INSTALLATION DETAILS INCLUDING STEPS.
3. THE MANHOLE PIPES & GRADE RINGS SHALL BE ARRANGED IN ORDER OF LONGER TO SHORTER LENGTHS FROM BOTTOM TO TOP.
4. SEE STD. PLAN No. 314 FOR GRADE RING DETAILS.

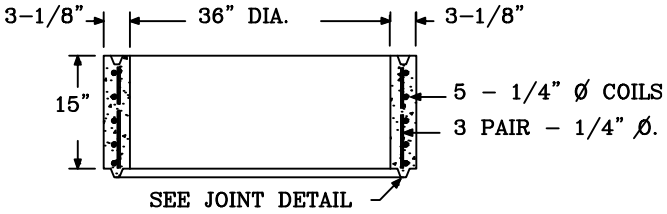

36" X 15" MANHOLE PIPE

36" REINFORCED CONCRETE MANHOLE

MARK CARROLL, R.C.E. 31515
CITY OF IRVINE - CITY ENGINEER

AUGUST 2013
DATE

STD. PLAN
312

SHEET 1 OF 1

CITY OF IRVINE
PUBLIC WORKS

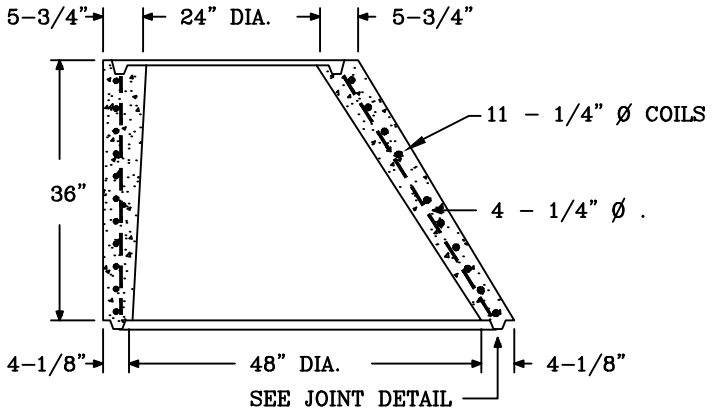

48" TO 24" ECCENTRIC CONE

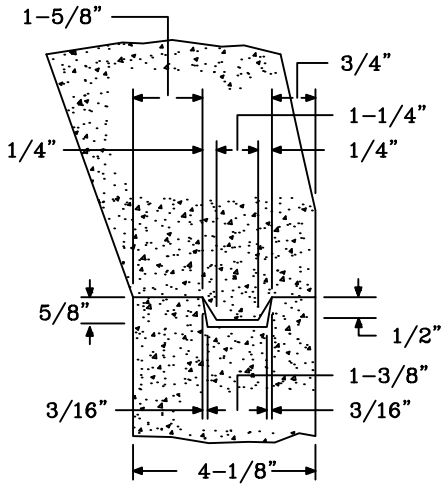

JOINT DETAIL

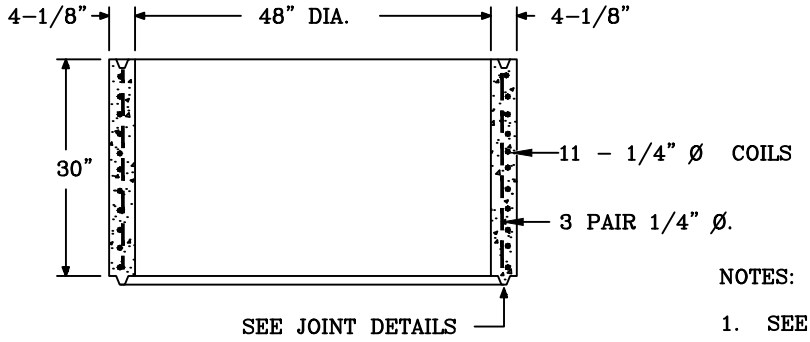

48" X 30" MANHOLE PIPE

NOTES:

1. SEE STD. PLAN No. 311 FOR FRAME & COVER.
2. SEE STD. PLAN No's. 306-308 & 306A-308A FOR MANHOLE INSTALLATION DETAILS INCLUDING STEPS.
3. THE MANHOLE PIPES & GRADE RINGS SHALL BE ARRANGED IN ORDER OF LONGER TO SHORTER LENGTHS FROM BOTTOM TO TOP.
4. SEE STD. PLAN No. 314 FOR GRADE RING DETAILS.

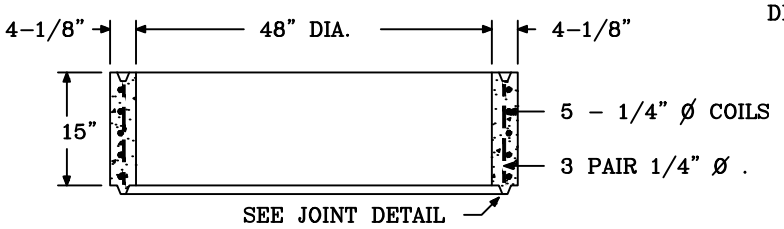

48" X 15" MANHOLE PIPE

48" REINFORCED CONCRETE MANHOLE

MARK CARROLL, R.C.E. 31515
CITY OF IRVINE - CITY ENGINEER

AUGUST 2013
DATE

STD. PLAN 313

SHEET 1 OF 1

CITY OF IRVINE
PUBLIC WORKS

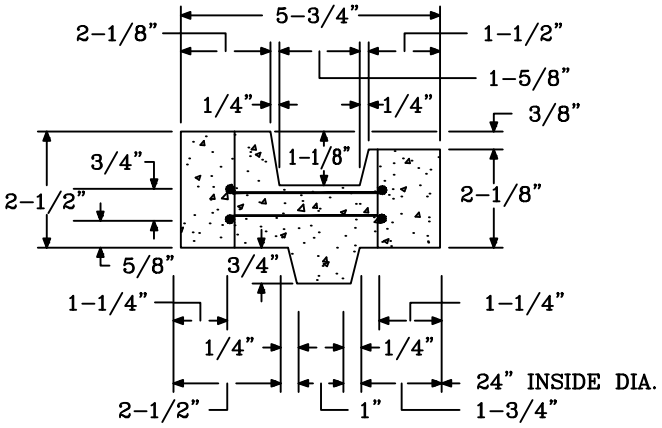

24" X 2 1/2" GRADE RING

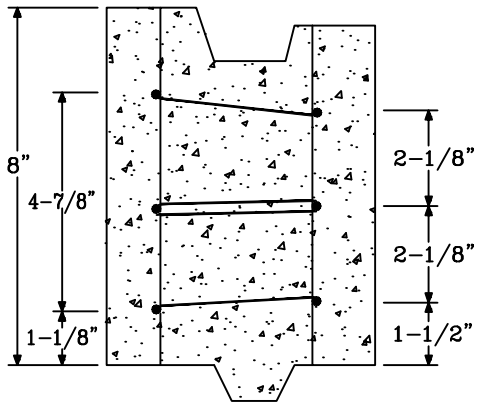

24" X 8" GRADE RING

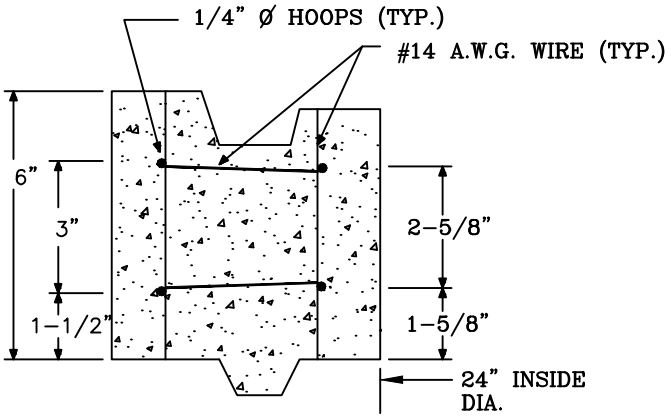

24" X 6" GRADE RING

NOTES:

1. SEE STD. PLAN No. 311 FOR FRAME & COVER.
2. SEE STD. PLAN No'S. 306, 307 & 308 FOR MANHOLE INSTALLATION DETAILS INCLUDING STEPS.
3. THE MANHOLE PIPES & GRADE RINGS SHALL BE ARRANGED IN ORDER OF LONGER TO SHORTER LENGTHS FROM BOTTOM TO TOP.
4. SEE STD. PLAN No. 312 FOR 36 INCH DIA. MANHOLE & STD. PLAN NO. 313 FOR 48 INCH DIA. MANHOLE.

24" REINFORCED CONCRETE GRADE RINGS

MARK CARROLL, R.C.E. 31515
CITY OF IRVINE - CITY ENGINEER

AUGUST 2013
DATE

STD. PLAN 314

SHEET 1 OF 1

CITY OF IRVINE
PUBLIC WORKS

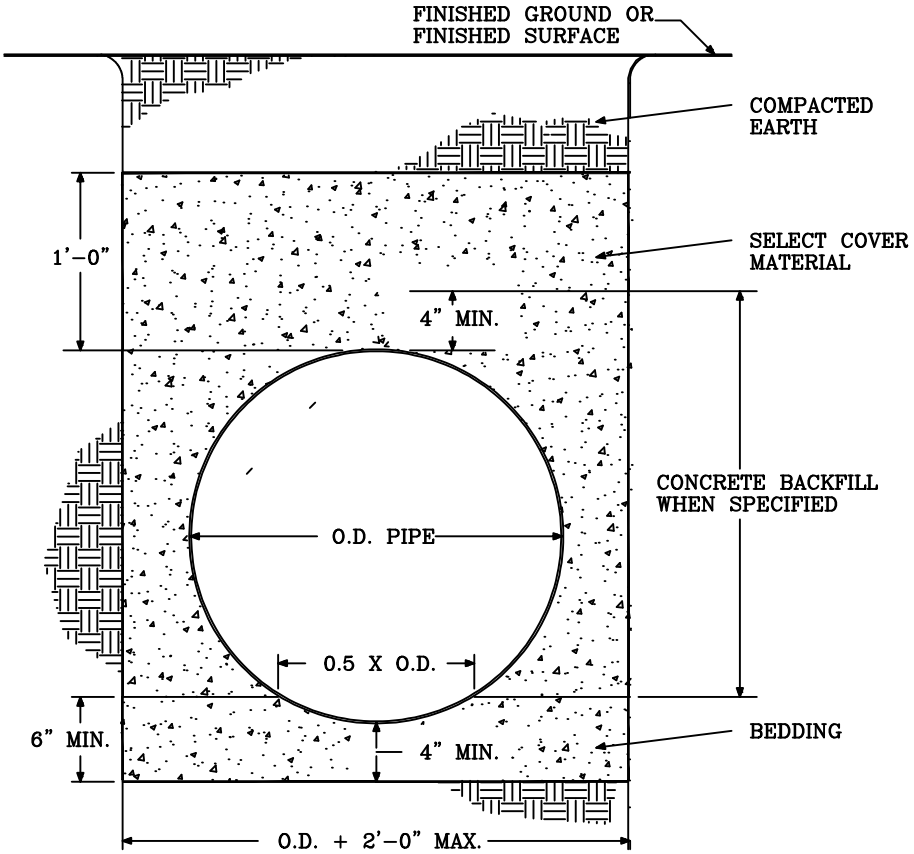

NOTES :

1. ALL MATERIAL MUST MEET THE APPROVAL OF THE FIELD INSPECTOR.
2. SELECT COVER MATERIAL SHALL BE SAND OR OTHER GRANULAR MATERIAL WITH A MIN. SAND EQUIVALENT OF 25.
3. BEDDING SHALL CONSIST OF SAND OR OTHER GRANULAR MATERIAL WITH A MIN. SAND EQUIVALENT OF 25 UNLESS GROUND WATER IS PRESENT, IN WHICH CASE BEDDING MATERIAL OF #3 ROCK IS REQUIRED.
4. BEDDING AND BACKFILL SHALL BE COMPACTED TO A RELATIVE COMPACTION OF NOT LESS THAN 90%, EXCEPT FINAL 2 FEET WHICH WILL BE NOT LESS THAN 95%.

STORM DRAIN BEDDING DETAIL

MARK CARROLL, R.C.E. 31515
CITY OF IRVINE - CITY ENGINEER

AUGUST 2013
DATE

STD. PLAN 318

SHEET 1 OF 1

GENERAL NOTES:

A. DESIGN CONSIDERATIONS

1. MINIMAL EROSION PROBLEMS MAY BE HANDLED BY THE USE OF A SANDBAG DIKE CONSTRUCTION IF APPROVED BY THE CITY ENGINEER.

2. SIZING OF BASIN SHALL BE BASED ON THE TOTAL DRAINAGE AREA TRIBUTARY TO THE BASIN. GRAPH "A" MAY BE USED TO ESTIMATE VOLUME. IF GRAPH "A" IS NOT USED, THE PROJECT ENGINEER SHALL JUSTIFY HIS DESIGN WITH ADEQUATE CALCULATIONS. (SEE PAGE 4)

3. THE COMBINED PIPE AND SPILLWAY OUTFLOW SHALL NOT EXCEED THE DOWNSTREAM CAPACITY NOR INCREASE THE DOWNSTREAM SEDIMENT LOADS, EXCEPT THAT THE OVERFLOW SPILLWAY SHALL BE DESIGNED TO CARRY 1.5 TIMES THE MAXIMUM RUNOFF.

4. BASIN MUST BE ACCESSIBLE FOR CLEANOUT DURING SATURATED GROUND CONDITION.

5. TO REDUCE TURBULENCE IN THE BASIN, THE BASIN SHALL HAVE AN ENERGY DISSIPATOR AT ITS UPSTREAM END AS APPROVED BY THE CITY ENGINEER.

6. THE BASIN SHALL BE LOCATED FOR EFFECTIVELY ACCOMPLISHING ITS PURPOSE, IN ACCORDANCE WITH ENGINEERED PLANS MEETING THE APPROVAL OF THE CITY ENGINEER.

7. BEYOND CERTAIN LIMITATIONS OF EMBANKMENT HEIGHT AND STORAGE CAPACITY, THE DESIGN OF THE BASIN WILL COME UNDER THE JURISDICTION OF, AND REQUIRE THE APPROVAL OF, THE CALIFORNIA DEPARTMENT OF WATER RESOURCES, DIVISION OF SAFETY OF DAMS, 2200 X STREET, SUITE 200, SACRAMENTO, CA 95818, 916-445-7606. (SEE EXHIBIT 1 ON PAGE 2)

8. DESILTING BASIN SHALL BE SO LOCATED THAT FAILURE OF THE BASIN STRUCTURE WILL NOT PRESENT A DANGER TO LIFE AND PROPERTY.

9. DRAINAGE DEVICES SHALL BE DESIGNED TO HANDLE RUN-OFF FROM A STORM OF 25 YEAR INTENSITY.

B. STORAGE

1. STORAGE CAPACITY SHALL BE THE VOLUME BELOW THE TOP OF THE PIPE RISER, AND SHALL BE BASED ON THE AVERAGE STREET SLOPE AND NATURE OF THE ERODIBLE SOIL IN THE AREA TRIBUTARY TO THE BASIN. SEE CHART OR GRAPH ON PAGE 4 FOR DETAILS.

2. THE DESIGN SHALL PROVIDE OPPORTUNITY FOR PERIODIC CLEANOUT IN ORDER TO MAINTAIN BASIN CAPACITY REQUIREMENTS. THE MAXIMUM ALLOWABLE LEVEL OF DEPOSITED SEDIMENT BEFORE CLEANOUT SHALL BE 1/2 FULL OR AS DETERMINED BY THE CITY ENGINEER AND PAINTED ON THE PIPE RISER.

3. SEDIMENT FROM BASIN CLEANOUT OPERATIONS SHALL BE DISPOSED OF IN SUCH A MANNER AS TO PREVENT ITS RETURN INTO THE DESILTING BASIN OR ITS MOVEMENT INTO DOWNSTREAM AREAS DURING SUBSEQUENT RUN-OFFS.

4. THE CONTRACTOR SHALL BE RESPONSIBLE AND SHALL TAKE NECESSARY PRECAUTIONS TO PREVENT PUBLIC TRESPASS ONTO AREAS WHERE IMPOUNDED WATER CREATES A HAZARDOUS CONDITION.

JURISDICTIONAL DAM SIZE

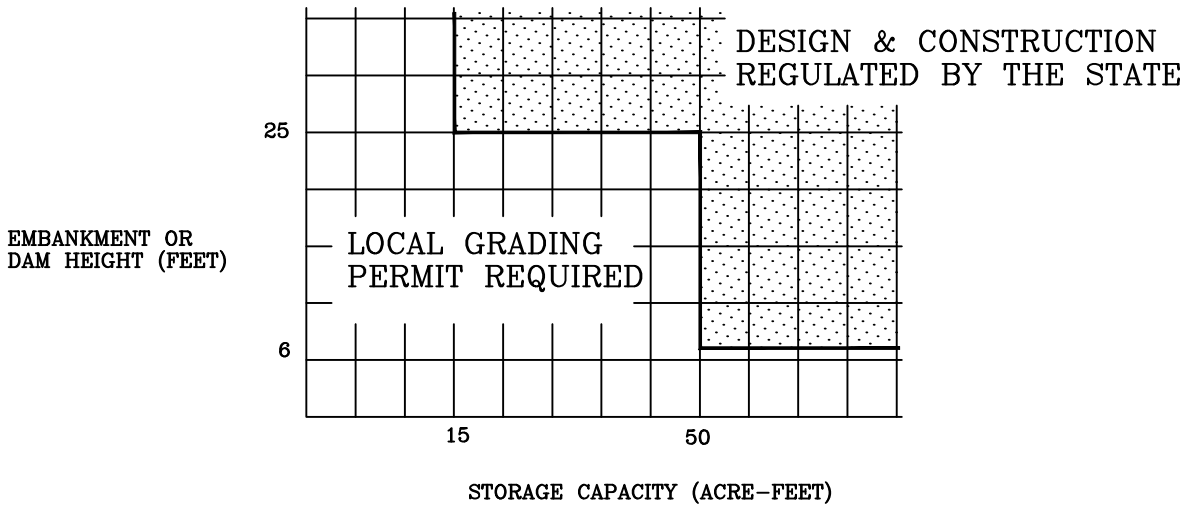

EXHIBIT 1

C. EMBANKMENT

1. THE EMBANKMENT MATERIAL SHALL BE TAKEN FROM BORROW AREAS AS STATED ON THE PLANS. ALL BORROW AREAS OUTSIDE THE POOL SHALL BE GRADED, SEEDED, AND LEFT IN SUCH A MANNER THAT THEY ARE WELL-DRAINED AND PROTECTED FROM EROSION.

2. THE MATERIAL SHALL BE FREE OF ALL SOD, ROOTS, WOODY VEGETATION, LARGE ROCK (EXCEEDING 6 INCHES IN DIAMETER), AND OTHER DEBRIS.

3. THE EMBANKMENT SHALL BE CONSTRUCTED TO AN ELEVATION WHICH PROVIDES FOR ANTICIPATED SETTLEMENT TO DESIGN ELEVATION (ALLOW 10% FOR SETTLEMENT).

4. THE FOUNDATION FOR THE EMBANKMENT SHALL BE SCARIFIED PRIOR TO PLACEMENT OF FILL.

5. PLACEMENT OF FILL MATERIAL SHALL BE STARTED AT LOWEST POINT OF THE FOUNDATION AND SHALL BE PLACED IN 6 INCH MAXIMUM LIFTS WHICH ARE TO BE CONTINUOUS OVER THE ENTIRE LENGTH OF THE FILL AND APPROXIMATELY HORIZONTAL. EMBANKMENT SHALL HAVE A RELATIVE COMPACTION OF AT LEAST 90%.

6. EMBANKMENT SIDE SLOPES SHALL BE NO STEEPER THAN 2:1.

D. SITE PREPARATION

1. THE EMBANKMENT FOUNDATION AREA AND RESERVOIR AREA SHALL BE CLEARED OF ALL TREES, STUMPS, ROOTS, BRUSH, BOULDERS, SOD, AND DEBRIS.

2. ALL TOPSOIL CONTAINING EXCESSIVE AMOUNTS OF ORGANIC MATTER SHALL BE REMOVED.

E. EROSION CONTROL PLAN

1. A SILTATION CONTROL PROGRAM AND PLAN FOR ALL PROPOSED DEVELOPMENTS MUST BE APPROVED BY THE CITY OF IRVINE PRIOR TO ISSUANCE OF GRADING PERMIT.

2. THE FOLLOWING NOTES SHALL BE PLACED ON THE PLANS:

   a. IN CASE OF EMERGENCY CALL _____
   (RESPONSIBLE PERSON)

   AT _____
   (24-HOUR PHONE NO.)

   b. THE UNDERSIGNED CIVIL ENGINEER WILL SUPERVISE EROSION CONTROL WORK AND CERTIFY THAT WORK IS IN ACCORDANCE WITH THE APPROVED PLANS.

   _____ (SIGNATURE) _____ (DATE)

   c. A STANDBY CREW FOR EMERGENCY WORK SHALL BE AVAILABLE AT ALL TIMES DURING THE RAINY SEASON. NECESSARY MATERIAL SHALL BE AVAILABLE ON SITE AND STOCKPILED AT CONVENIENT LOCATIONS TO FACILITATE RAPID CONSTRUCTION OF TEMPORARY DEVICES OR TO REPAIR ANY DAMAGED EROSION CONTROL MEASURES WHEN RAIN IS IMMINENT.

   d. DEVICES SHALL NOT BE MOVED OR MODIFIED WITHOUT THE APPROVAL OF THE CITY INSPECTOR.

   e. ALL REMOVABLE PROTECTIVE DEVICES SHOWN SHALL BE IN PLACE AT THE END OF EACH WORKING DAY, WHEN THE FIVE-DAY RAIN PROBABILITY FORECAST EXCEEDS 40 PERCENT.

   f. AFTER A RAINSTORM, ALL SILT AND DEBRIS SHALL BE REMOVED FROM CHECK BERMS AND DESILTING BASINS AND THE BASINS PUMPED DRY. ANY GRADED SLOPE SURFACE PROTECTION MEASURES DAMAGED DURING A RAINSTORM SHALL ALSO BE IMMEDIATELY REPAIRED.

   g. FILL SLOPE AT THE TRACT PERIMETER MUST DRAIN AWAY FROM THE TOP OF THE SLOPE AT THE CONCLUSION OF EACH WORKING DAY.

   h. A GUARD SHALL BE POSTED ON THE SITE WHENEVER THE DEPTH OF WATER IN ANY DEVICE EXCEEDS TWO FEET.

3. PLACEMENT OF DEVICES TO REDUCE EROSION DAMAGE WITHIN THE TRACT MUST BE SHOWN ON THE PLAN.

CHART A

FOR ESTIMATING QUANTITIES OF SEDIMENT IN CUBIC YARDS PER GROSS ACRE

TYPE OF SOIL	AVERAGE STREET SLOPE					
	2%	5%	8%	10%	12%	15%
LOOSE GRANULAR	28	33	38	41	45	50
COMPACTED	10	17	20	24	27	30

GRAPH A

FOR ESTIMATING QUANTITIES OF SEDIMENT IN CUBIC YARDS PER GROSS ACRE

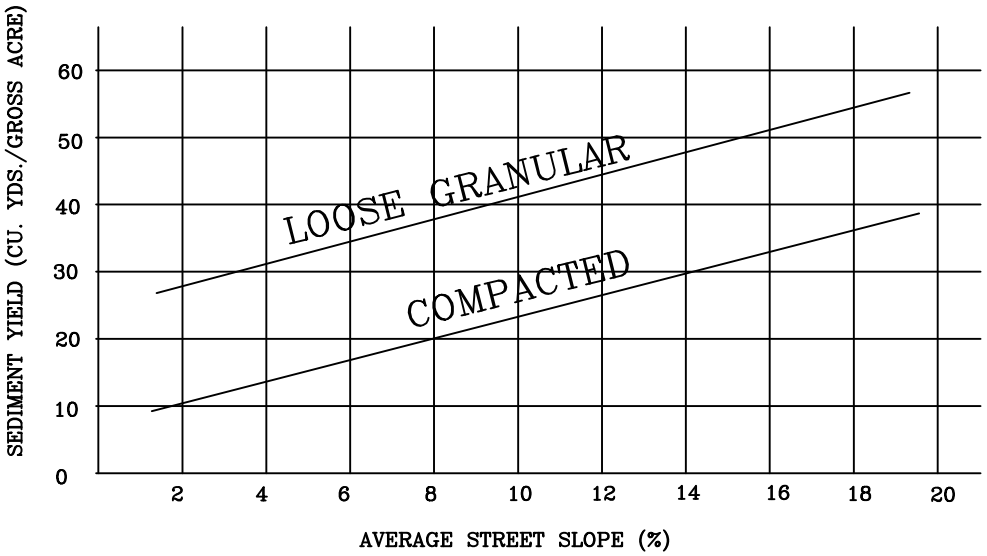

* BASED ON UNIVERSAL SOIL EQUATION FOR ORANGE COUNTY FIELD CONDITIONS

EXAMPLE

TRACT AREA = 56 GROSS ACRES
AVERAGE STREET SLOPE = 8%
SOIL TYPE = LOOSE GRANULAR

FROM EITHER CHART OR GRAPH IT CAN BE DETERMINED THAT:
SEDIMENT YIELD = 38 CU. YDS./GROSS ACRE
∴ TOTAL SEDIMENT = 38 x 56 = 2128 CU. YDS.

BASIN SIZE = 2200 CU. YDS.

DESILTING BASIN

MARK CARROLL, R.C.E. 31515
CITY OF IRVINE - CITY ENGINEER

AUGUST 2013
DATE

STD. PLAN 319

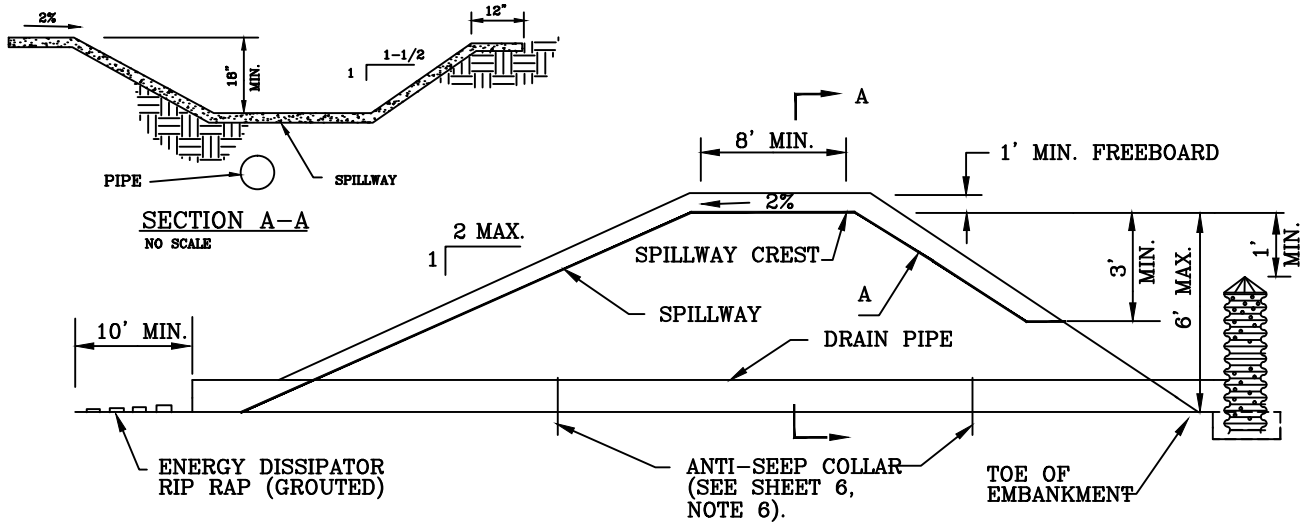

SECTION THROUGH EMBANKMENT

NOTES:

A. SPILLWAY

1. THE SPILLWAY MUST BE LINED WITH 3 INCH THICK GUNITE OR 4 INCH THICK CONCRETE, (EACH REINFORCED WITH 6 x 6 – 10 x 10 WELDED WIRE FABRIC). SPILLWAY WILL BE A MINIMUM OF 18 INCHES DEEP WITH 1-1/2":1 SIDE SLOPE.

2. THE SPILLWAY SHALL BE DESIGNED TO PROVIDE ONE SQUARE FOOT OF CROSS SECTIONAL AREA FOR EACH GROSS ACRE OF TRIBUTARY DRAINAGE AREA, OR 1.5 TIMES THE MAXIMUM DESIGN RUN-OFF, WHICHEVER IS GREATER.

3. THE MAXIMUM HEIGHT OF THE EARTH DIKE SHALL BE 6 FEET FROM THE TOE OF THE UPSTREAM SLOPE TO THE SPILLWAY CREST.

B. FREEBOARD

1. FREEBOARD IS THE VERTICAL DISTANCE BETWEEN THE ELEVATION OF THE WATER SURFACE IN THE POND WHEN SPILLWAY IS DISCHARGING AT DESIGNED DEPTH AND THE ELEVATION OF THE TOP OF THE EMBANKMENT AFTER ALL SETTLEMENT HAS TAKEN PLACE.

2. MINIMUM FREEBOARD SHALL BE 1'-0" FOR BASIN WHERE THE MAXIMUM LENGTH OF POND IS LESS THAN 660 FEET. FOR MAXIMUM POND LENGTHS OF 660 FEET OR MORE, THE MINIMUM FREEBOARD SHALL BE DETERMINED BY THE CITY ENGINEER.

DESILTING BASIN

MARK CARROLL, R.C.E. 31515
CITY OF IRVINE - CITY ENGINEER

AUGUST 2013
DATE

STD. PLAN
319

CITY OF IRVINE
PUBLIC WORKS

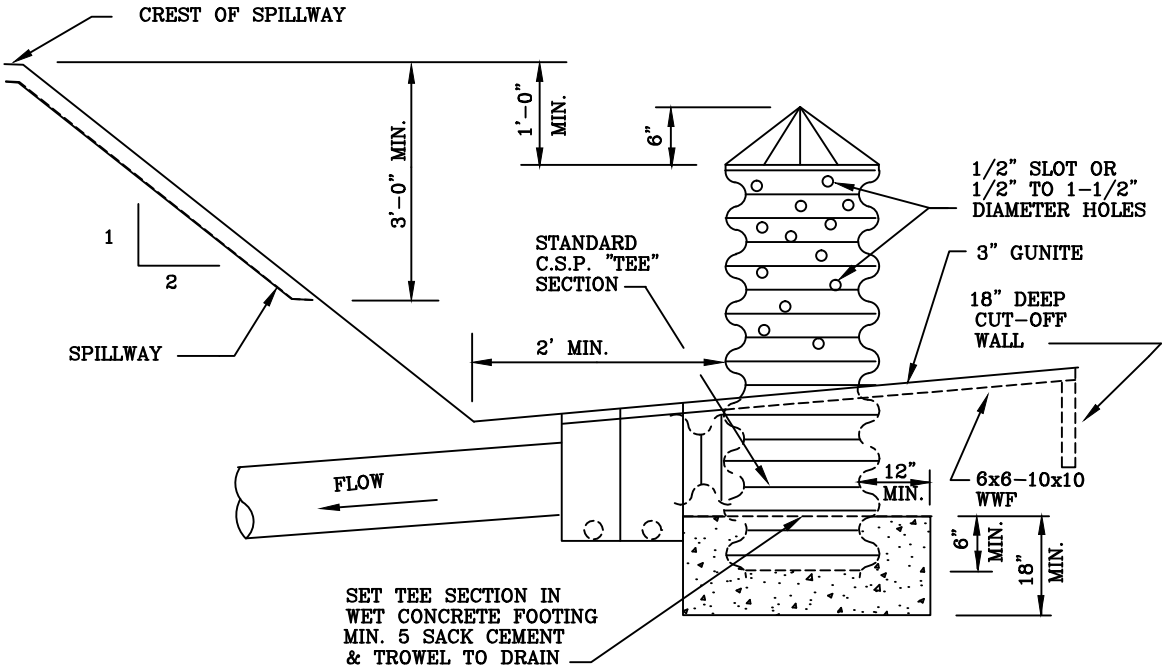

DRAIN PIPE & RISER

NO SCALE

NOTES:

DRAIN PIPE AND RISER

1. RISER SHALL BE CONSTRUCTED IN ACCORDANCE WITH CITY OF IRVINE STANDARD PLAN No. 304. RISER SHALL HAVE A CROSS-SECTIONAL AREA AT LEAST 1.5 TIMES THE CROSS-SECTIONAL AREA OF THE HORIZONTAL DRAIN PIPE.
2. THE MINIMUM DRAIN PIPE SHALL BE A 12 INCH C.S.P., 14 GA., OR AN ALTERNATE APPROVED BY THE CITY ENGINEER.
3. THE UPPER MOST ELEVATION OF THE RISER SHALL BE SUCH THAT FULL FLOW WILL BE GENERATED BEFORE THERE IS DISCHARGE OVER THE SPILLWAY AND AT LEAST ONE FOOT BELOW THE TOP OF THE SPILLWAY.
4. THE DRAIN PIPE SHALL BE PLACED ON A FIRM FOUNDATION.
5. THE RISER SHALL HAVE A BASE ATTACHED WITH A WATERTIGHT CONNECTION AND SHALL HAVE SUFFICIENT WEIGHT TO PREVENT FLOTATION OF THE RISER. TWO RECOMMENDED METHODS ARE:
   a. A SQUARE CONCRETE BASE 18 INCHES THICK WITH THE RISER EMBEDDED SIX INCHES INTO THE BASE. EACH SIDE OF THE BASE WILL BE THE DIAMETER OF THE RISER PLUS 24 INCHES.
   b. A 1/4-INCH MINIMUM THICKNESS STEEL PLATE WELDED ALL AROUND THE BASE OF THE RISER TO FORM A WATERTIGHT CONNECTION. THE PLATE SHALL BE SQUARE WITH EACH SIDE EQUAL TO TWO TIMES THE RISER DIAMETER. THE PLATE SHALL HAVE TWO FEET OF STONE, GRAVEL, OR TAMPED EARTH PLACED ON IT TO PREVENT FLOTATION.
6. ANTI-SEEP COLLARS ARE REQUIRED AT 10' INTERVALS FOR PIPE UNDER THE EMBANKMENT. EACH COLLAR SHALL BE RECTANGULAR WITH EACH SIDE A MINIMUM OF THE PIPE DIAMETER PLUS 24 INCHES. THE COLLAR(S) SHALL BE WELDED TO THE PIPE.
7. DISCHARGE SHALL BE TO A PAVED STREET, CHANNEL, OR APPROVED DRAINAGE COURSE WITH GROUTED RIPRAP. RIPRAP SHALL BE MINIMUM 6 INCH SIZE ROCK.

DESILTING BASIN

MARK CARROLL, R.C.E. 31515
CITY OF IRVINE - CITY ENGINEER

AUGUST 2013
DATE

STD. PLAN 319

SHEET 6 OF 6

CITY OF IRVINE
PUBLIC WORKS

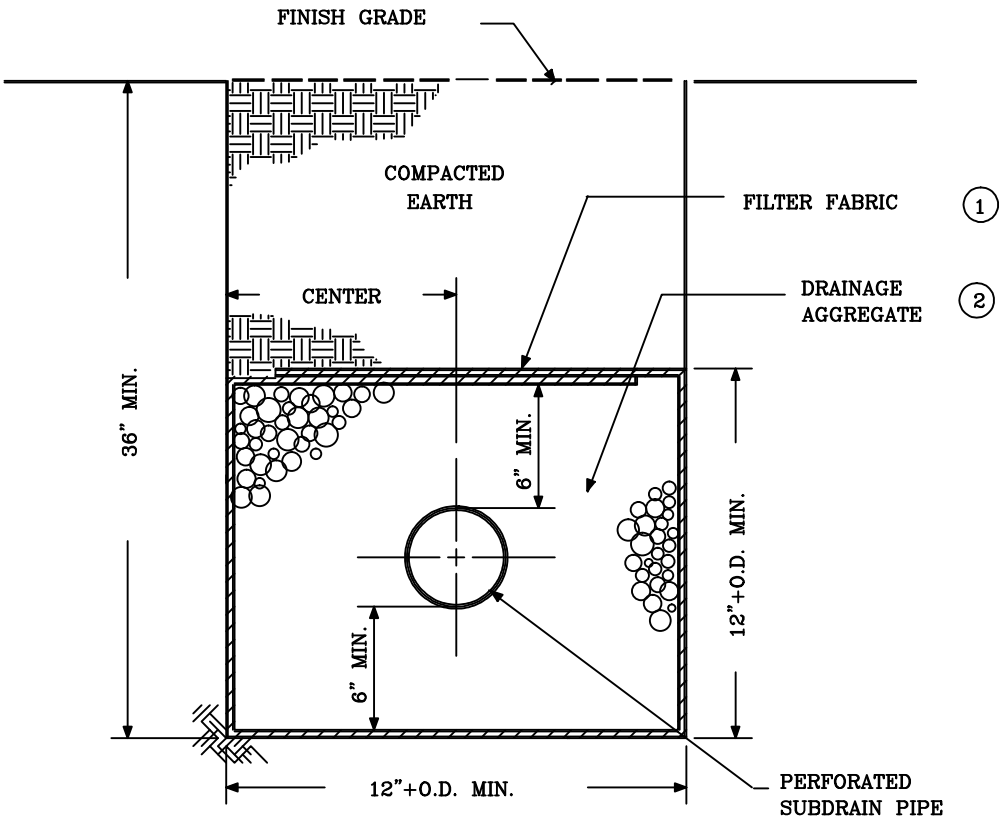

SUBDRAIN

NOTES :

1. FILTER FABRIC :

   SUPAC 5-P, OR EQUIVALENT WITH 18-INCH MIN. OVERLAP

2. DRAINAGE AGGREGATE :

   MIN. 3 CUBIC FEET PER FOOT. SEE GRADING REQUIREMENT AT RIGHT

3. PERFORATED SUBDRAIN PIPE :

   4-INCH MIN. DIAMETER PVC SCH 40, OR EQUIVALENT. FOR RUNS IN EXCESS OF 300 FT. USE 6-INCH DIAMETER PIPE

4. THE PIPE PERFORATION DIAMETER SHALL NOT EXCEED ONE HALF THE "D85" OF THE DRAINAGE AGGREGATE. THE TOTAL AREA OF THE PIPE PERFORATIONS SHALL NOT EXCEED ONE SQUARE INCH PER LINEAL FOOT OF PIPE.

AGGREGATE GRADATION *

PERCENTAGE PASSING SIEVES			
SIEVE SIZE	1"	3/4"	1/2"
1-1/2"	100	–	–
1"	90-100	100	–
3/4"	30-60	90-100	100
1/2"	0-20	30-60	90-100
3/8"	–	0-20	20-60
No. 4	0-5	0-5	0-15
No.8	–	–	0-5
ASTM C131 TEST GRADING	A	B	B

* IN ACCORDANCE WITH SECTION 200-1.2, STANDARD SPECIFICATIONS FOR PUBLIC WORKS CONSTRUCTION.

SUBDRAIN DETAILS

MARK CARROLL, R.C.E. 31515
CITY OF IRVINE - CITY ENGINEER

AUGUST 2013
DATE

STD. PLAN 320

SHEET 1 OF 2

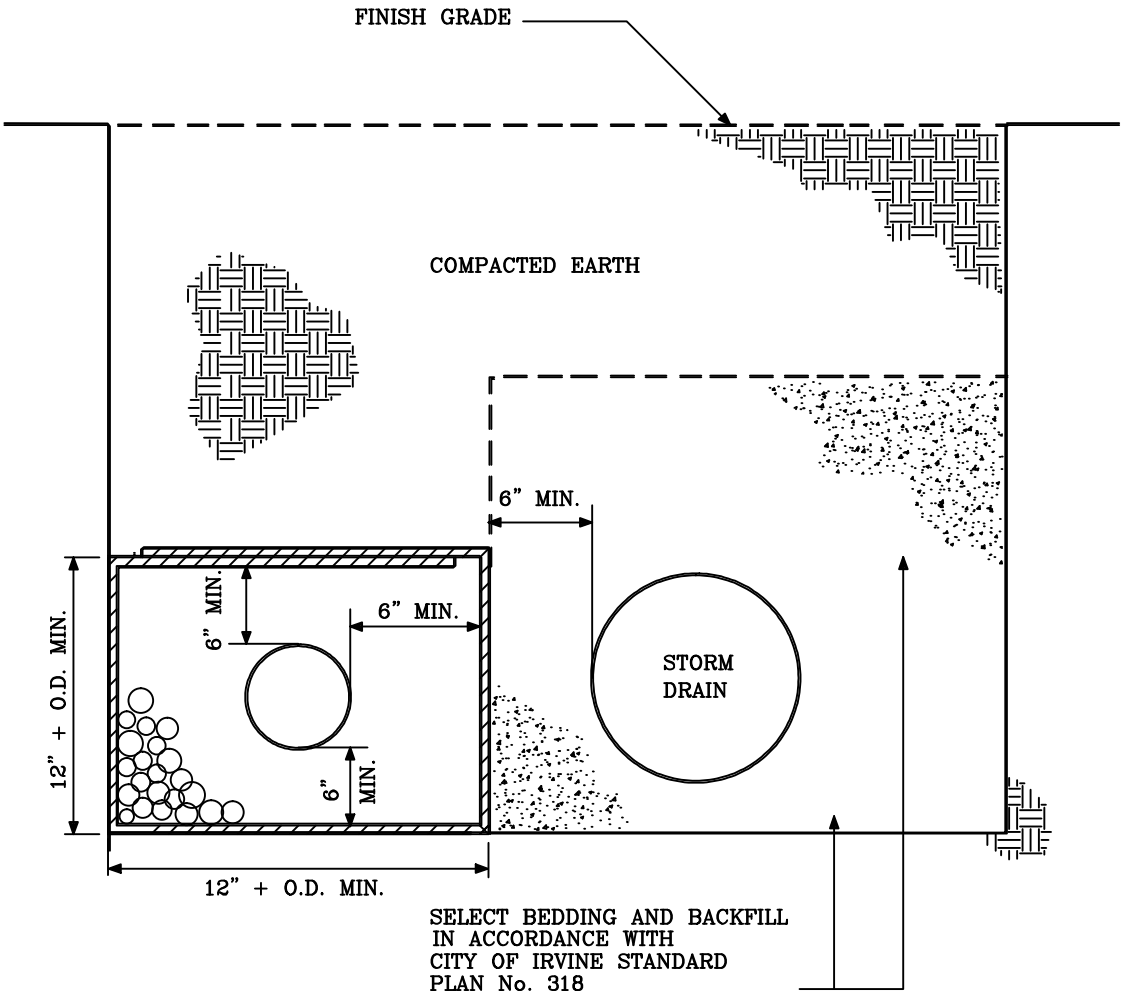

SUBDRAIN ADJACENT TO STORM DRAIN

NOTE :

INVERT OF SUBDRAIN PIPE AT OUTLET JUNCTION STRUCTURES SHALL BE AT MINIMUM OF 4 INCHES ABOVE STORM DRAIN INVERT

SUBDRAIN DETAILS

MARK CARROLL, R.C.E. 31515
CITY OF IRVINE - CITY ENGINEER

AUGUST 2013
DATE

STD. PLAN 320

CITY OF IRVINE
PUBLIC WORKS

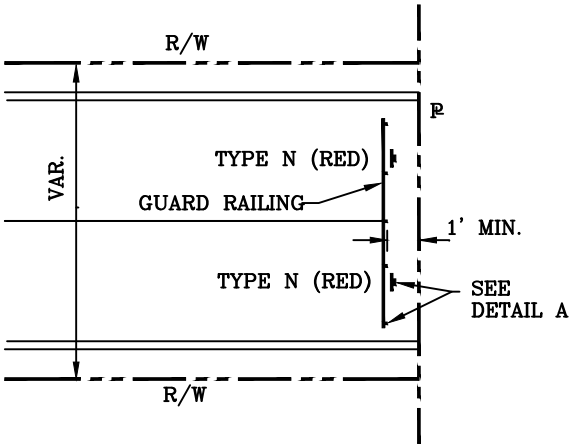

TYPICAL DEAD END

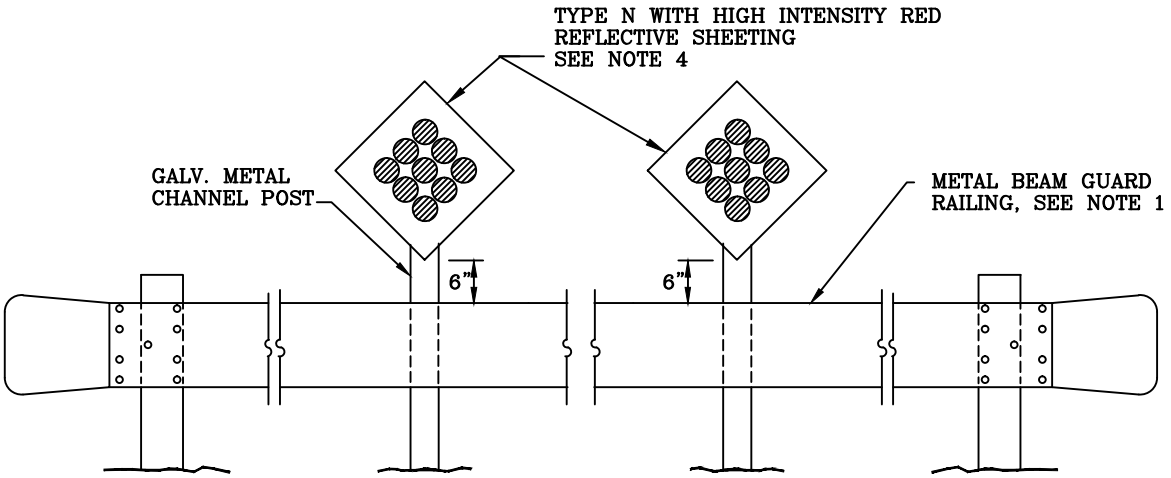

DETAIL A

NOTES:

1. SEE STANDARD PLAN No. 401 FOR METAL BEAM GUARD RAILING DETAILS.
2. LENGTH OF METAL BEAM RAILING SHALL BE IN MULTIPLE OF 12'-6", PLUS 1'-9" FOR EACH END PIECE.
3. THE METAL BEAM GUARD RAILING MAY BE DELETED UNDER SPECIAL CONDITIONS UPON APPROVAL BY THE CITY ENGINEER. THE TYPE N SIGNS OR L(3) MARKERS SHALL BE PLACED AS SHOWN IN DETAILS REGARDLESS OF METAL BEAM GUARD RAILING USED.
4. ONE TYPE N SIGN SHALL BE PLACED IN THE CENTER OF EACH TRAVEL LANE IN A DEAD END SITUATION.

DEAD END SIGNING

MARK CARROLL, R.C.E. 31515
CITY OF IRVINE - CITY ENGINEER

AUGUST 2013
DATE

STD. PLAN 400

SHEET 1 OF 1

CITY OF IRVINE
PUBLIC WORKS

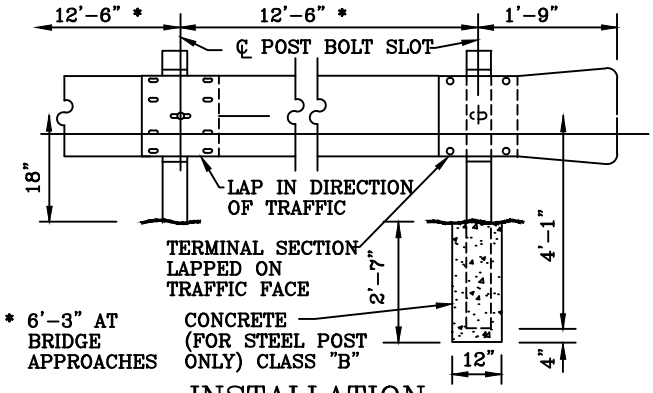

INSTALLATION

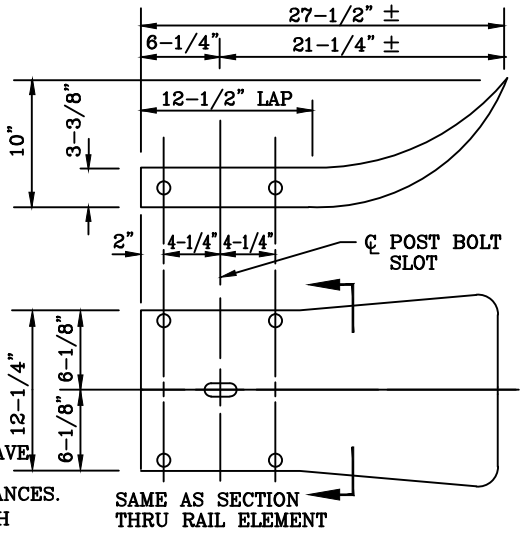

TERMINAL SECTION

NOTES:

1. GUARD RAILING FLARES AT BRIDGE APPROACHES SHALL HAVE A MINIMUM RADIUS OF 150'.
2. ALL DIMENSIONS ARE SUBJECT TO MANUFACTURING TOLERANCES.
3. ALL WOOD TO BE PRESSURE TREATED IN ACCORDANCE WITH STATE SPECS.

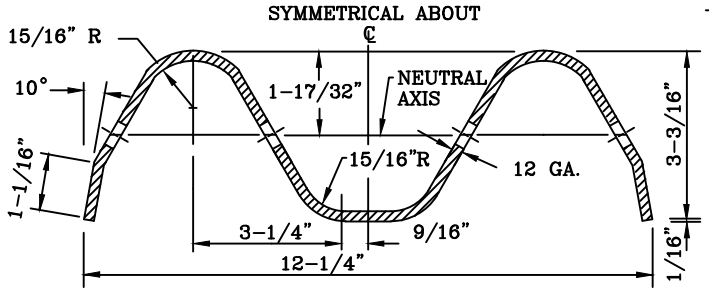

SECTION THROUGH RAIL ELEMENT

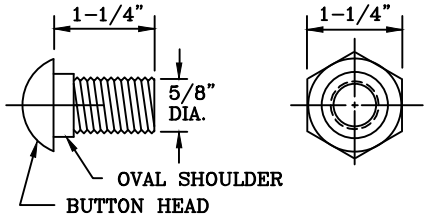

SPLICE BOLT & NUT

POST BOLT: SIMILAR EXCEPT LENGTH

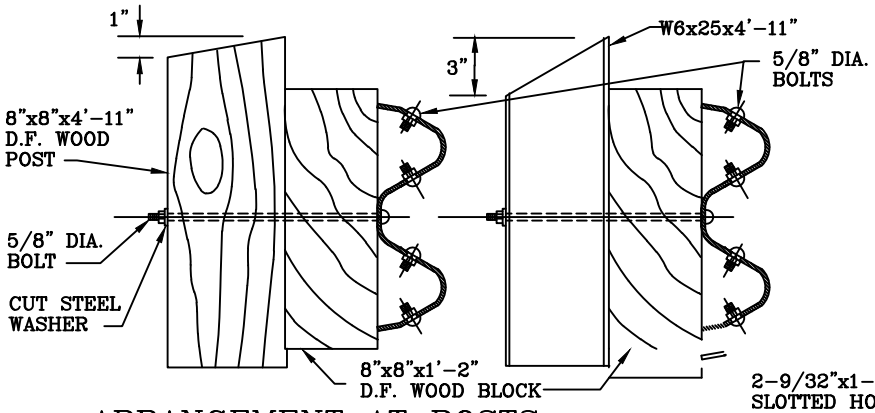

ARRANGEMENT AT POSTS

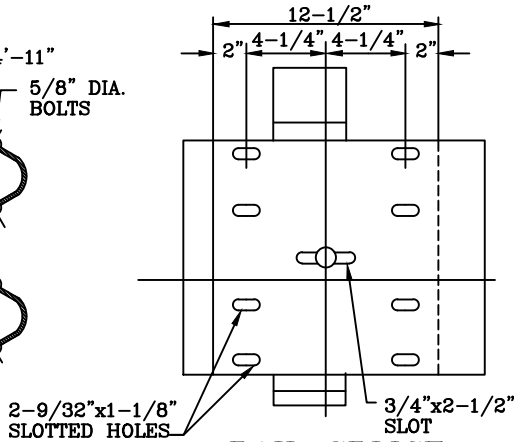

RAIL SPLICE

METAL BEAM GUARD RAILING

MARK CARROLL, R.C.E. 31515
CITY OF IRVINE - CITY ENGINEER

AUGUST 2013
DATE

STD. PLAN 401

SHEET 1 OF 1

CITY OF IRVINE
PUBLIC WORKS

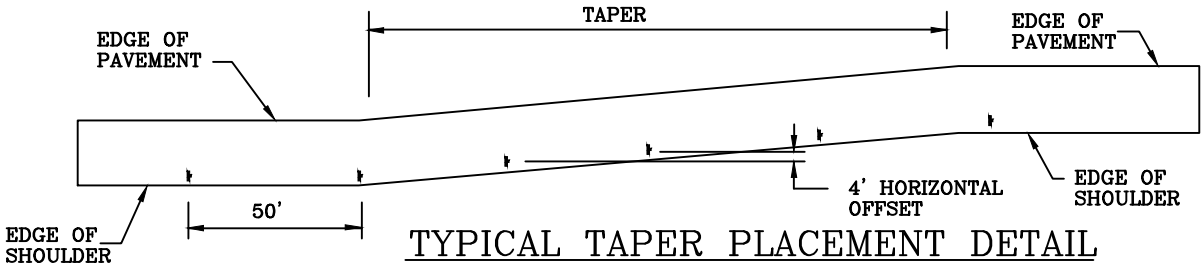

TYPICAL TAPER PLACEMENT DETAIL

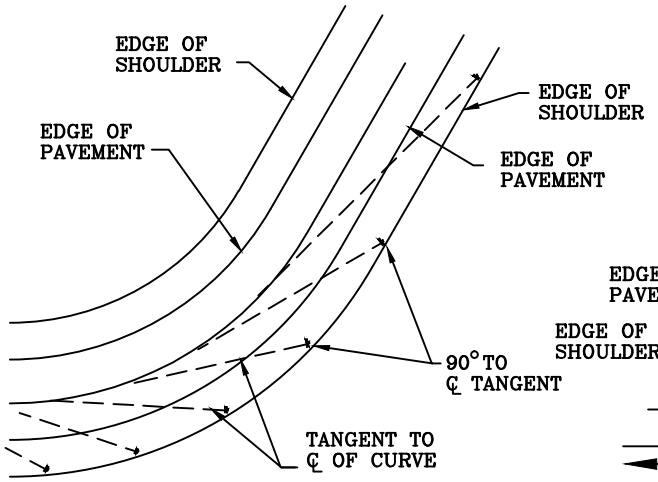

CURVE PLACEMENT DETAIL

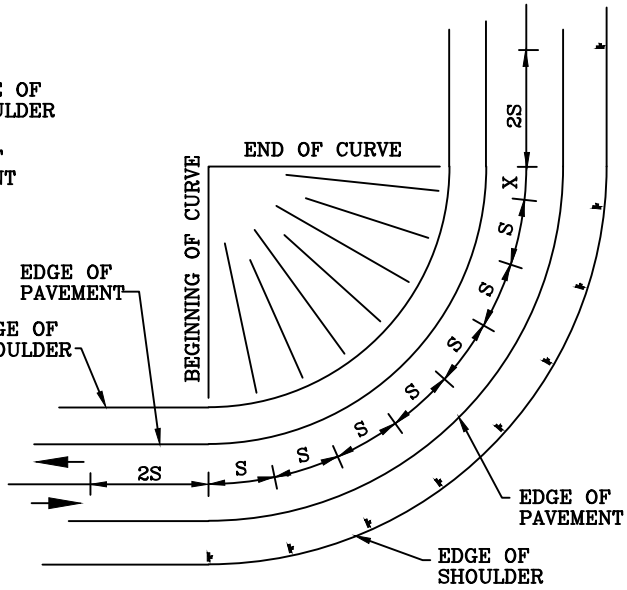

SPACING DETAIL

TABLE 1	
R IN FT.	S IN FT.
50'	20'
75'	20'
100'	25'
150'	30'
200'	35'
300'	50'
400'	55'
500'	65'
600'	70'
700'	75'
800'	80'
900'	85'
1000'	90'
1200'	100'
1400'	110'
1600'	115'
1800'	125'
2000'	130'
2500'	150'
3000'	160'

LEGEND:

S = GUIDE MARKER SPACING IN FEET. $S = 3\sqrt{R-50}$.

R = CENTERLINE CURVE RADIUS IN FEET.

⊢ = GUIDE MARKER.

X = DISTANCE REMAINING WITHIN CURVE FROM LAST CALCULATED GUIDE MARKER TO END OF CURVE.

NOTES:

1. MAXIMUM SPACING BETWEEN GUIDE MARKERS = 300 FEET, MINIMUM = 20 FEET.
2. GUIDE MARKER SPACING ON CURVES LESS THAN 2000 FEET RADIUS SHALL CONFORM TO THE SPACING INDICATED IN TABLE 1.
3. PRORATE DISTANCE "X" AMONG ALL SPACINGS WITHIN CURVE SO LAST GUIDE MARKER FALLS AT END OF CURVE.

GUIDE MARKER PLACEMENT

MARK CARROLL, R.C.E. 31515
CITY OF IRVINE - CITY ENGINEER

AUGUST 2013
DATE

STD. PLAN 402

SHEET 1 OF 1

CITY OF IRVINE

PUBLIC WORKS

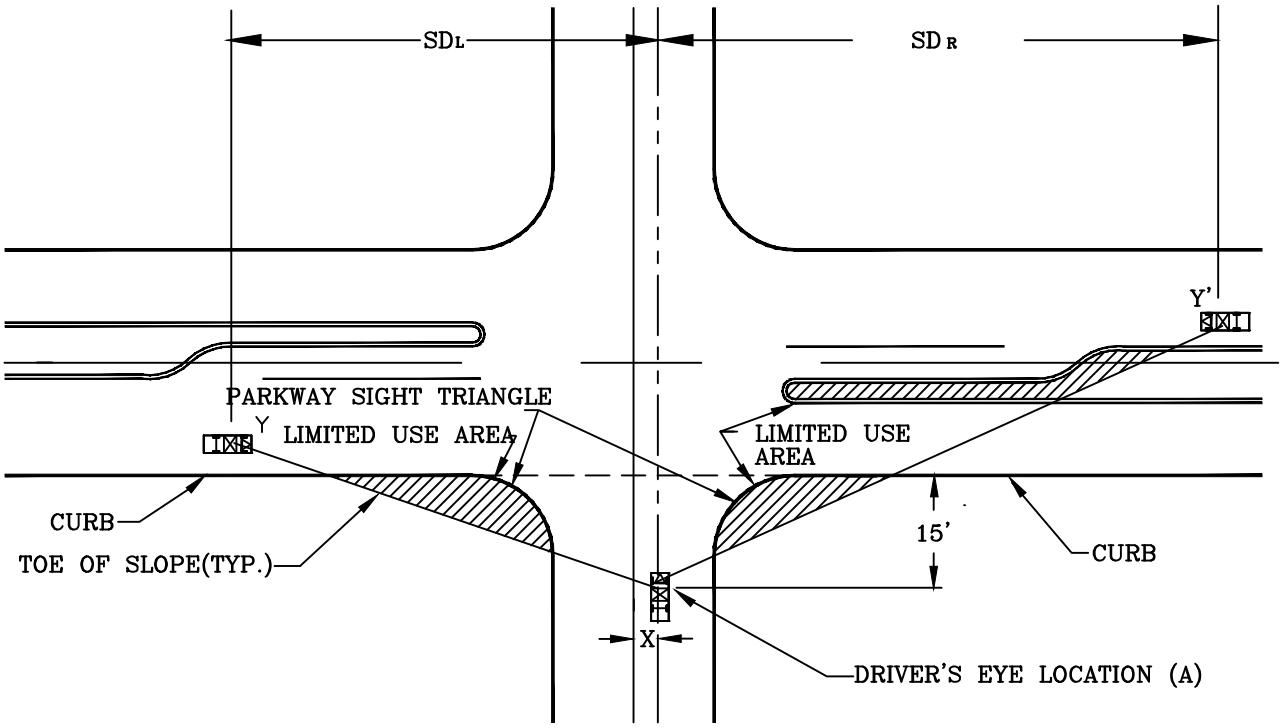

		NON–SIGNALIZED		SIGNALIZED
DESIGN SPEED	ROADWAY CLASSIFICATION	SD_L	SD_R	$SD_L = SD_R$
	ARTERIALS			
60	MAJOR	650 FT.	800 FT.	650 FT.
55	PRIMARY	600 FT.	700 FT.	600 FT.
50	SECONDARY	500 FT.	600 FT.	500 FT.
45	COMMUTER	400 FT.	525 FT.	400 FT.
35	LOCAL COLLECTORS	325 FT.	450 FT.	325 FT.
25	LOCAL	225 FT.	250 FT.	250 FT.
20	PRIVATE WAY	150 FT.	175 FT.	N/A

SIGHT DISTANCE DETAIL

MARK CARROLL, R.C.E. 31515
CITY OF IRVINE - CITY ENGINEER

AUGUST 2013
DATE

STD. PLAN 403

SHEET 1 OF 2

NOTES:

1. THE LIMITED USE ARE IS DETERMINED BY THE GRAPHICAL METHOD USING THE APPROPRIATE DISTANCES GIVEN IN THE ABOVE TABLE. IT SHALL BE USED FOR THE PURPOSE OF PROHIBITING OR CLEARING OBSTRUCTIONS TO MAINTAIN ADEQUATE SIGHT DISTANCE AT INTERSECTIONS.

2. THE LINE OF SIGHT SHALL BE SHOWN AT INTERSECTIONS ON ALL LANDSCAPING PLANS, GRADING PLANS, AND TENTATIVE TRACT PLANS WHERE SAFE SIGHT DISTANCE IS QUESTIONABLE. IN CASES WHERE AN INTERSECTION IS LOCATED ON A VERTICAL CURVE, A PROFILE OF THE SIGHT LINE MAY BE REQUIRED.

3. WALLS OR ANY OBSTRUCTIONS RESTRICTING THE VIEW WITHIN THE LIMITED USE AREA SHALL NOT BE PERMITTED.

4. THE TOE OF THE SLOPE SHALL NOT ENCROACH INTO THE LIMITED USE AREA.

5. THE LIMITED USE AREA SHALL BE AS NEAR LEVEL AS POSSIBLE YET MAINTAIN PROPER DRAINAGE.

6. PLANTS AND SHRUBS WITHIN THE LIMITED USE AREA SHALL BE OF THE TYPE THAT WILL GROW NO HIGHER THAN 30 INCHES ABOVE THE CURB ADJACENT TO THE LIMITED USE AREA.

7. POINT A IS THE LOCATION OF THE DRIVER'S LINE OF SIGHT WHILE IN A VEHICLE AT AN INTERSECTION 15 FEET BACK FROM THE PROJECTION OF THE CURB LINE. THE DISTANCE X IS THE DISTANCE MEASURED FROM THE CENTER LINE OF THE ROAD TO THE CENTER LINE OF THE NUMBER ONE THROUGH LANE. THE DISTANCE X IS EQUAL TO ZERO FOR T-INTERSECTIONS.

8. THE DISTANCES SD_L AND SD_R REPRESENT THE SAFE STOPPING SIGHT DISTANCE MEASURED ALONG THE CENTER LINE OF THE ROAD.

9. POINT Y IS THE DISTANCE MEASURED FROM THE CENTER LINE OF THE MAIN ROAD TO THE CENTER OF THE FAR RIGHT THROUGH TRAVEL LANE. THE POINT Y' IS THE DISTANCE MEASURED FROM THE CENTER LINE OF THE MAIN ROAD TO THE CENTER OF THE TRAVEL LANE NEAREST THE CENTER LINE OF THE ROAD.

10. THE MAXIMUM TREE SIZE AND MINIMUM TREE SPACING IN THE LIMITED USE AREA FOR ALL MAJOR STREETS SHALL BE 24-INCH CALIPER TREE TRUNKS (MAXIMUM SIZE AT MATURITY) SPACED AT 60-FEET ON CENTER.

    THE MAXIMUM TREE SIZE AND MINIMUM TREE SPACING IN THE LIMITED USE AREA FOR ALL PRIMARY AND SECONDARY STREETS SHALL BE 24-INCH CALIPER TREE TRUNKS (MAXIMUM SIZE AT MATURITY) SPACED AT 40-FEET ON CENTER.

    THE MAXIMUM TREE SIZE AND MINIMUM TREE SPACING IN THE LIMITED USE AREA FOR ALL LOCAL AND COLLECTOR STREETS SHALL BE 24-INCH CALIPER TREE TRUNKS (MAXIMUM SIZE AT MATURITY) SPACED AT 30-FEET ON CENTER.

    TREES HAVING MATURE TRUNKS GREATER THAN 24-INCH CALIPER TREE TRUNKS (e.g. EXISTING WINDOW CONDITIONS) SHALL REQUIRE SEPARATE REVIEW AND APPROVAL FROM THE CITY OF IRVINE. THE ADDITIONAL ANALYSIS SHALL DEMONSTRATE THE ABILITY TO MEET MINIMUM SIGHT DISTANCE REQUIREMENTS OF IRVINE.

11. PRIVATE/PUBLIC LOCAL STREET OR PRIVATE WAY INTERSECTIONS – PARKING IS ALLOWED WITHIN THE LIMITED USE AREA BUT SHALL BE A MIN. DISTANCE OF 20 FEET FROM THE ECR AND BCR (SEE STD. PLAN 113/113A).

12. PRIVATE/PUBLIC LOCAL STREET OR PRIVATE WAY AT PRIVATE COURT – PARKING IS ALLOWED WITHIN THE LIMITED USE AREA BUT SHALL BE A MIN. DISTANCE OF 15 FEET FROM PRIVATE COURT (SEE STD. PLAN 112).

SIGHT DISTANCE DETAIL

MARK CARROLL, R.C.E. 31515
CITY OF IRVINE - CITY ENGINEER

AUGUST 2013
DATE

STD. PLAN
403

CITY OF IRVINE

PUBLIC WORKS

CONCRETE CLASS USE TABLE

CONSTRUCTION	CONCRETE CLASS	MAX. SLUMP	EQUIV. SACK MIX
STREET SURFACE IMPROVEMENTS			
CONCRETE PAVEMENT (not integral with curb)	520-A-2500	3"	5.5
CURB, INTEGRAL CURB & PAVEMENT, GUTTER, WALK, ALLEY APRONS, MEDIAN NOSE	520-C-2500	4"	5.5
EXTRUDED CURB, CURB & GUTTER	520-C-2500	1.5"	5.5
	520-D-2500	1.5"	5.5
SEWER & STORM DRAINAGE FACILITIES			
PIPE COLLARS, BEAM SUPPORT FOR PIPE, PRE-CAST MANHOLE COMPONENTS, CATCH BASINS, SIDEWALK CULVERTS	560-C-3250**	5"	6
SIDEHILL SURFACE DRAINAGE FACILITIES	500-C-2500	3"	5.5
PIPE BEDDING & ENCASEMENT*, ANCHORS & THRUST BLOCKS, WALL SUPPORT FOR PIPE	420-C-2000**	4"	4.5
TUNNEL BACKFILL	480-C-2000	5"	5
TRENCH BACKFILL SLURRY	100-E-100	5"	1
REINFORCED STRUCTURES			
BRIDGES, BUILDINGS, RETAINING WALLS	560-C-3250**	4"	6
CAST-IN-PLACE PILES	560-C-3250**	4"	6
CHANNELS & BOXES			
INVERT	560-B-3250	4"	6
WALLS & DECK	560-C-3250	5"	6
MISCELLANEOUS			
STREET LIGHT & TRAFFIC SIGNAL FOUNDATIONS, SURVEY MONUMENTS	560-C-3250	4"	6
FENCE & GUARDRAIL POST FOUNDATIONS	500-C-2500	5"	5.5
CONCRETE NOT OTHERWISE SPECIFIED	560-C-3250	5"	5.5
AIR PLACED CONCRETE, METHOD B	600-E-3250	4"	6.5

*USE LIMITED TO BEDDING CONCRETE OVER WHICH BACKFILL WILL BE PLACED NOT LESS THAN 40 HOURS AFTER PLACEMENT. FOR BACKFILL AFTER 24 HOURS, ADD 3 PINTS (1.4L) OF CALCIUM CHLORIDE. FOR BACKFILL AFTER 16 HOURS & REMOVAL OF SHEETING AFTER 18 HOURS. USE 660-C-3750 WITH 3 PINTS (1.4L) CALCIUM CHLORIDE SOLUTION.

**USE B AGGREGATE GRADUATION WHEN CONDITIONS PERMIT.

FOR AGGREGATE GRADUATION SEE STANDARD SPECIFICATIONS FOR PUBLIC WORKS CONSTRUCTION. CURRENT EDITION.

TYPE V-CEMENT (6-SACK) SHALL BE USED FOR ALL CONCRETE IN CONTACT WITH SOIL HAVING A HIGH SULFATE CONTENT OR AS SPECIFIED BY THE SOILS ENGINEER.

CONCRETE CLASS USE TABLE

MARK CARROLL, R.C.E. 31515
CITY OF IRVINE - CITY ENGINEER

AUGUST 2013
DATE

STD. PLAN 405

SHEET 1 OF 1

CITY OF IRVINE
PUBLIC WORKS

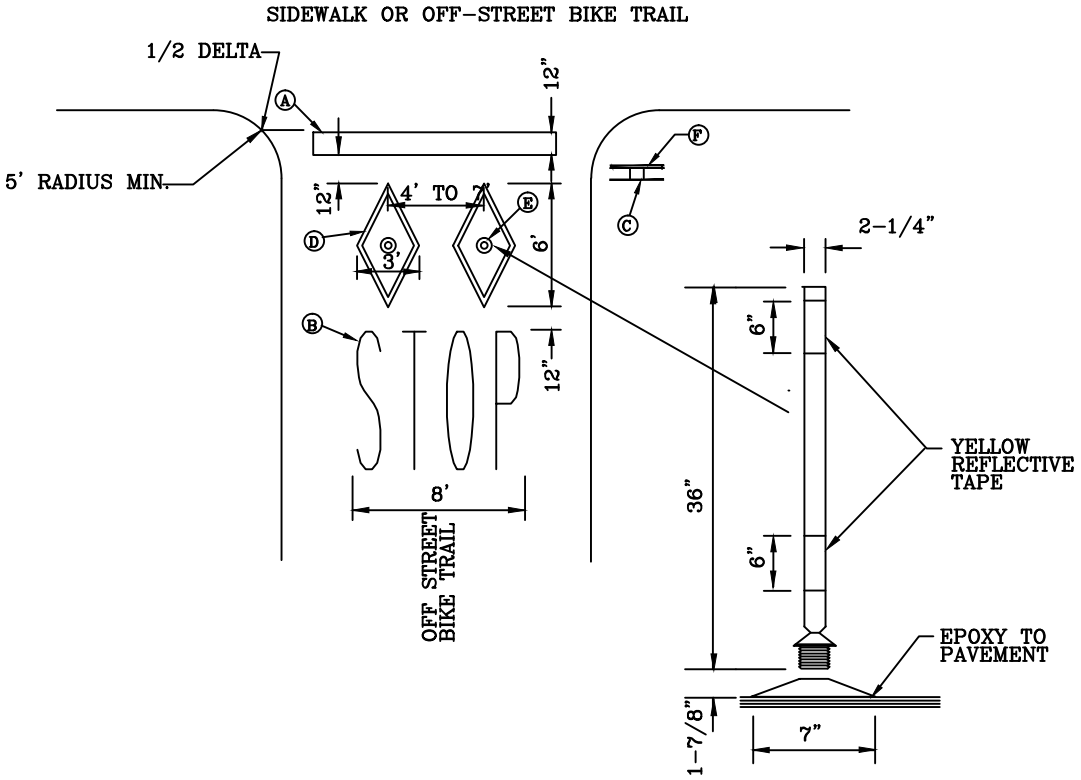

Ⓐ PAINTED LIMIT LINE (WHITE).

Ⓑ PAINTED STOP LEGEND IN ACCORDANCE WITH CALTRANS STANDARD AND CITY OF IRVINE STENCILS (WHITE).

Ⓒ 30 INCH STOP (R-1) SIGN MOUNTED ON 4 INCH x 4 INCH x 12 FOOT REDWOOD POST. POST TO BE PAINTED IRVINE BROWN

Ⓓ 4 INCH WIDE PAINTED DIAMOND (WHITE).

Ⓔ FLEXIBLE PLASTIC POST AS MANUFACTURED BY TRAFFLEX:
36 INCH HIGH ORANGE POST WITH YELLOW REFLECTIVE TAPE(#SG 02378) AND BLACK BASE(#SG 05322).
ADHESIVE:
BAUER TWO PART EPOXY OR EQUIVALENT (A)2336A9, (B)2337A9.

Ⓕ CALTRANS R44A SIGN.

NOTE:

1. THIS STANDARD SHALL BE USED ONLY WHEN THE OFF-STREET BIKE TRAIL DOES NOT INTERSECT WITH THE STREET OR DRIVEWAY CURB RETURN.
2. ALL PAINT SHALL BE REFLECTORIZED TRAFFIC PAINT.

OFF-STREET BIKE TRAIL INTERSECTION

MARK CARROLL, R.C.E. 31515
CITY OF IRVINE - CITY ENGINEER

AUGUST 2013
DATE

STD. PLAN 410

SHEET 1 OF 1

CITY OF IRVINE
PUBLIC WORKS

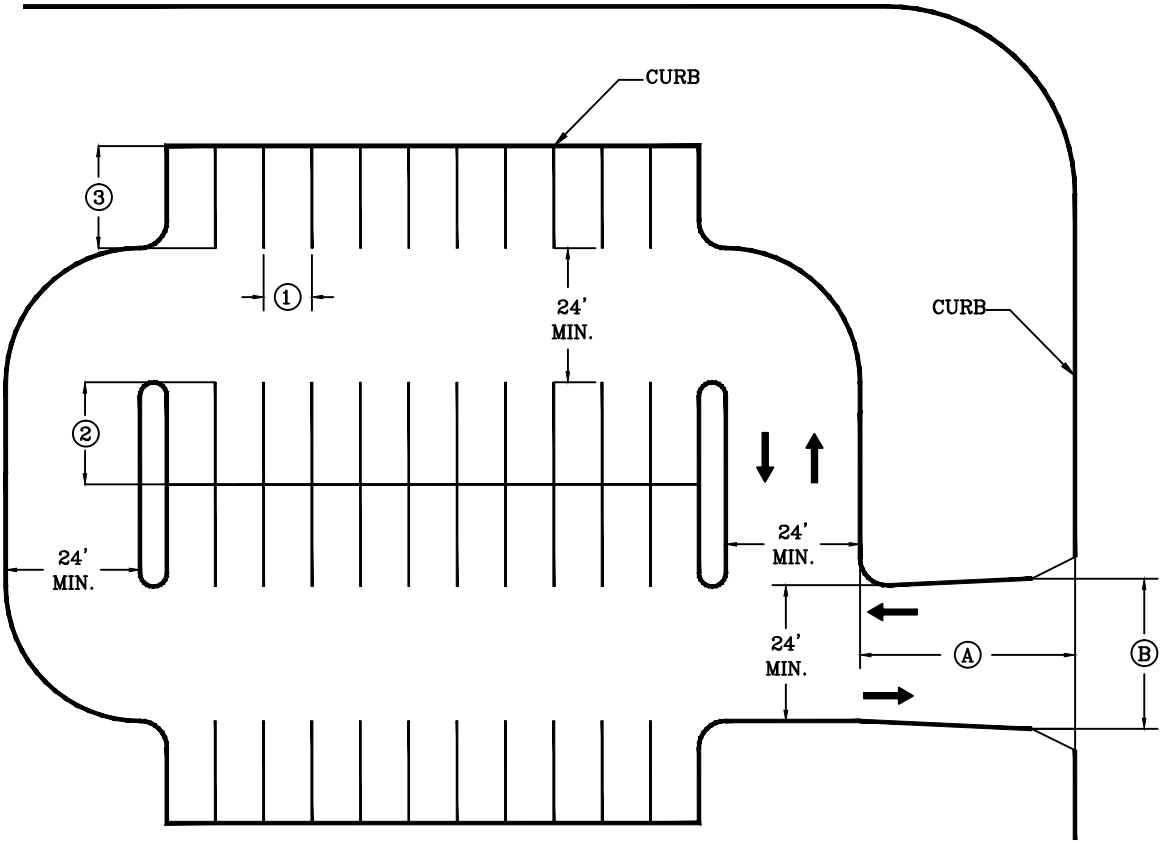

PARKING STALL DIMENSIONS			
TYPE	STALL WIDTH	STALL DEPTH	STALL DEPTH **
FULL-SIZED SPACE	① 9.0' *	② 19.0' *	③ 17' w/2' O.H.
LONG-TERM SPACE	① 8.5' *	② 19.0' *	③ 17' w/2' O.H.
Ⓐ SETBACK PER CITY POLICY Ⓑ PER CITY STANDARD PLANS 204, 205, & 206.			

* PARKING STALL DIMENSIONS SHALL BE IN ACCORDANCE WITH ZONING ORDINANCE SECTION 4-4-1.

** PARKING STALL OVERHANG (OVER A CURB) SHALL HAVE LOW-COVER LANDSCAPING OR A MINIMUM 6 FOOT WIDE SIDEWALK. SEE STANDARD PLAN 201 FOR SIDEWALK DETAILS.

*** PARKING STRUCTURE STALL DIMENSIONS VARY FROM STANDARD PLAN 411. REFER TO ZONING ORDINANCE SECTION 4-4-1B.

90° PARKING LAYOUT
DOUBLE-LOADED AISLES

OFF-STREET PARKING

MARK CARROLL, R.C.E. 31515
CITY OF IRVINE - CITY ENGINEER

AUGUST 2013
DATE

STD. PLAN 411

SHEET 1 OF 5

CITY OF IRVINE
PUBLIC WORKS

FULL SIZE SPACES

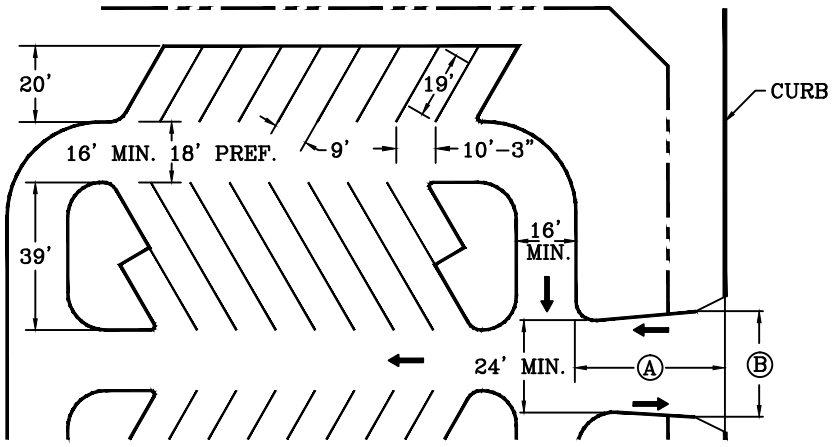

LONG TERM SPACES

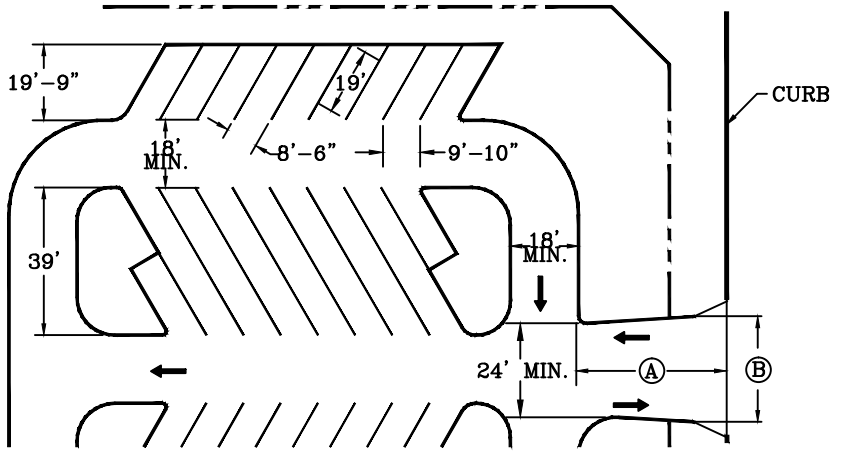

NOTES:

Ⓐ SETBACK PER CITY POLICY.

Ⓑ PER CITY STANDARD PLANS 204, 205, & 206.

* PARKING STALL DIMENSIONS SHALL BE IN ACCORDANCE WITH ZONING ORDINANCE SECTION 4-4-1.

** PARKING STRUCTURE STALL DIMENSIONS VARIES FROM STANDARD PLAN 411. REFER TO ZONING ORDINANCE SECTION 4-4-1B.

*** FOR PARKING STALL DEPTHS OF 17' WITH 2' OVERHANG (OVER A CURB), THE PARKING STALL OVERHANG SHALL HAVE LOW-COVER LANDSCAPING OR A MINIMUM 6 FOOT WIDE SIDEWALK. SEE STANDARD PLAN 201 FOR SIDEWALK DETAILS.

60° ANGLE PARKING LAYOUT
ONE WAY DIRECTION

OFF-STREET PARKING

MARK CARROLL, R.C.E. 31515
CITY OF IRVINE - CITY ENGINEER

AUGUST 2013
DATE

STD. PLAN 411

FULL SIZE SPACES

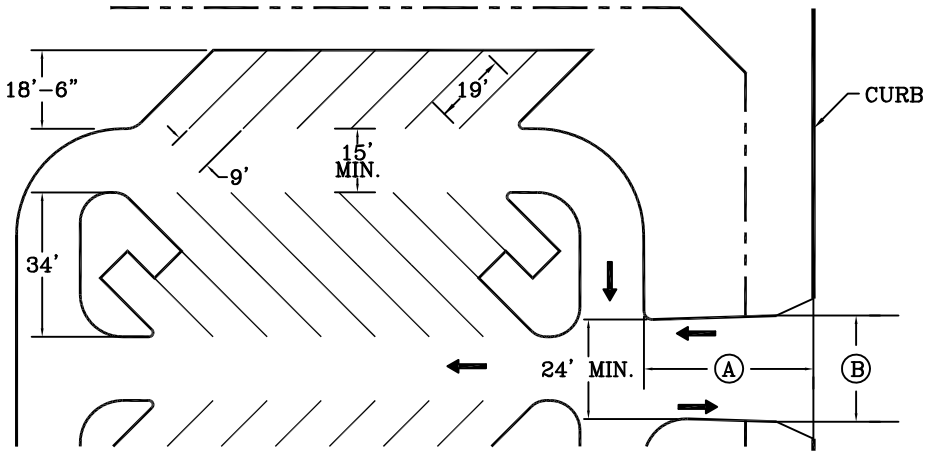

LONG TERM SPACES

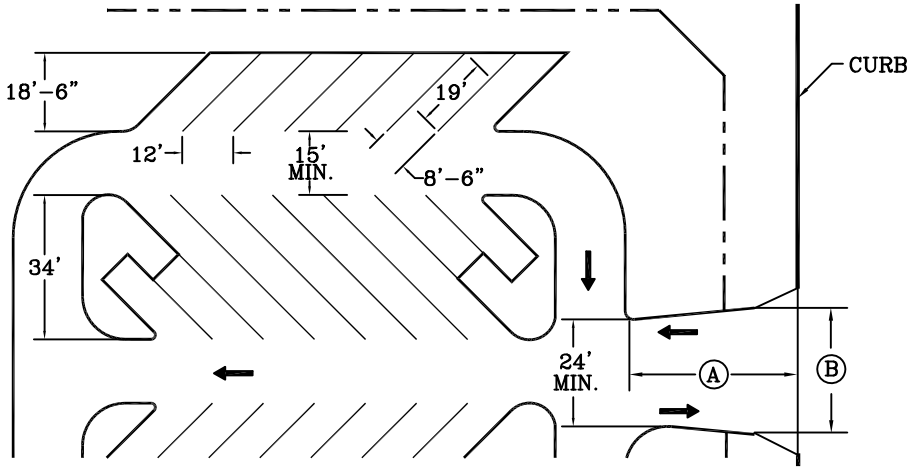

NOTES:

Ⓐ SETBACK PER CITY POLICY.

Ⓑ PER CITY STANDARD PLANS 204, 205, & 206.

* PARKING STALL DIMENSIONS SHALL BE IN ACCORDANCE WITH ZONING ORDINANCE SECTION 4-4-1.

** PARKING STRUCTURE STALL DIMENSIONS VARIES FROM STANDARD PLAN 411. REFER TO ZONING ORDINANCE SECTION 4-4-1B.

*** FOR PARKING STALL DEPTHS OF 17' WITH 2' OVERHANG (OVER A CURB), THE PARKING STALL OVERHANG SHALL HAVE LOW-COVER LANDSCAPING OR A MINIMUM 6 FOOT WIDE SIDEWALK. SEE STANDARD PLAN 201 FOR SIDEWALK DETAILS.

45° ANGLE PARKING LAYOUT
ONE WAY DIRECTION

OFF-STREET PARKING

MARK CARROLL, R.C.E. 31515
CITY OF IRVINE - CITY ENGINEER

AUGUST 2013
DATE

STD. PLAN
411

SHEET 3 OF 5

CITY OF IRVINE
PUBLIC WORKS

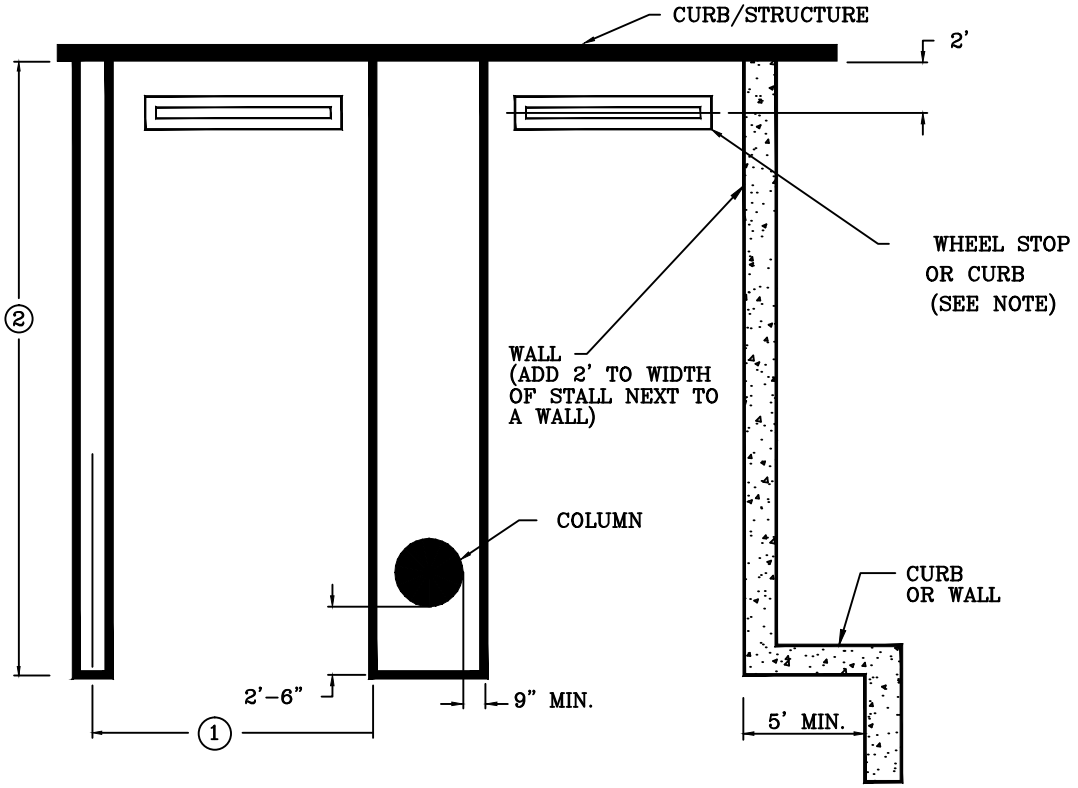

** PARKING STALL DIMENSIONS				
	OFFICE USE		RESIDENTIAL USE	
STALL TYPE	① STALL WIDTH	② STALL DEPTH	① STALL WIDTH	② STALL DEPTH
FULL-SIZED SPACE	9.0'	18.0'	9.0'	18.0'
LONG-TERM SPACE	8.5'	18.0'	8.5'	18.0'
*COMPACT SPACE	8.0'	16.0'	8.0'	16.0'

WHEEL STOPS:
AUTOMOBILE AND HANDICAPPED SPACES SHALL HAVE WHEEL STOPS NO LESS THAN 5 INCHES IN HEIGHT IN SITUATIONS WHERE THE DIRECTOR OF COMMUNITY DEVELOPMENT DETERMINES WHEEL STOPS ARE NECESSARY TO PREVENT ENCROACHMENT INTO LANDSCAPED OR PEDESTRIAN AREAS.

* COMPACT SPACES ARE ONLY PERMITTED IN PARKING STRUCTURES FOR OFFICE USE AREAS. SEE CITY OF IRVINE ZONING ORDINACE CHAPTER 4-4-1.B

** PARKING STALL DIMENSIONS SHALL BE IN ACCORDANCE WITH ZONING ORDINANCE SECTION 4-4-1.

PARKING STALL DIMENSIONS AND COLUMN PLACEMENT IN PARKING STRUCTURES

OFF-STREET PARKING

MARK CARROLL, R.C.E. 31515
CITY OF IRVINE - CITY ENGINEER

AUGUST 2013
DATE

STD. PLAN 411

CITY OF IRVINE
PUBLIC WORKS

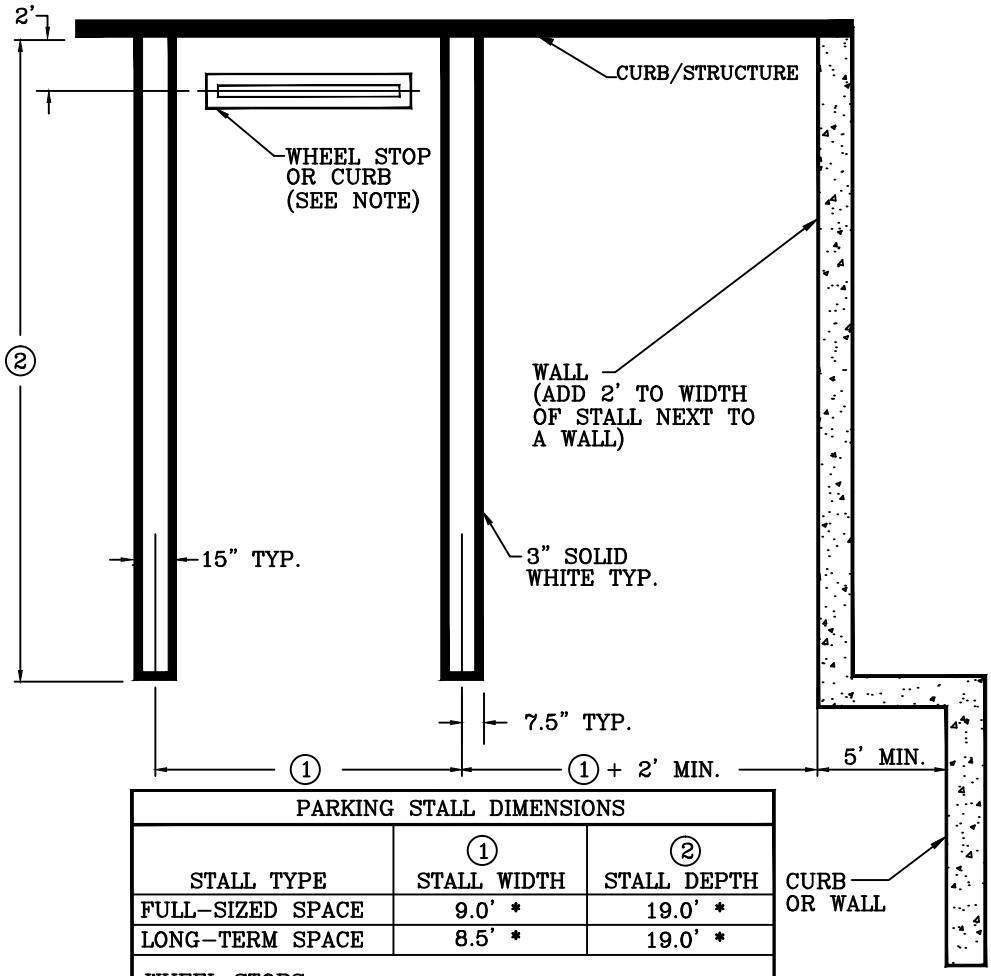

PARKING STALL DIMENSIONS		
STALL TYPE	① STALL WIDTH	② STALL DEPTH
FULL-SIZED SPACE	9.0' *	19.0' *
LONG-TERM SPACE	8.5' *	19.0' *

WHEEL STOPS:

AUTOMOBILE AND HANDICAPPED SPACES SHALL HAVE WHEEL STOPS NOT LESS THAN 6 INCHES IN HEIGHT IN SITUATIONS WHERE THE DIRECTOR OF COMMUNITY DEVELOPMENT DETERMINES WHEEL STOPS ARE NECESSARY TO PREVENT ENCROACHMENT INTO STRUCTURES, LANDSCAPED OR PEDESTRIAN AREAS.

* PARKING STALL DIMENSIONS SHALL BE IN ACCORDANCE WITH ZONING ORDINANCE SECTION 4-4-1.
** PARKING STRUCTURE STALL DIMENSIONS VARY FROM STANDARD PLAN 411. REFER TO ZONING ORDINANCE SECTION 4-4-1B.

STRIPING DETAIL FOR
SURFACE PARKING LOTS

OFF-STREET PARKING

MARK CARROLL, R.C.E. 31515
CITY OF IRVINE - CITY ENGINEER

AUGUST 2013
DATE

STD. PLAN 411

CITY OF IRVINE
PUBLIC WORKS

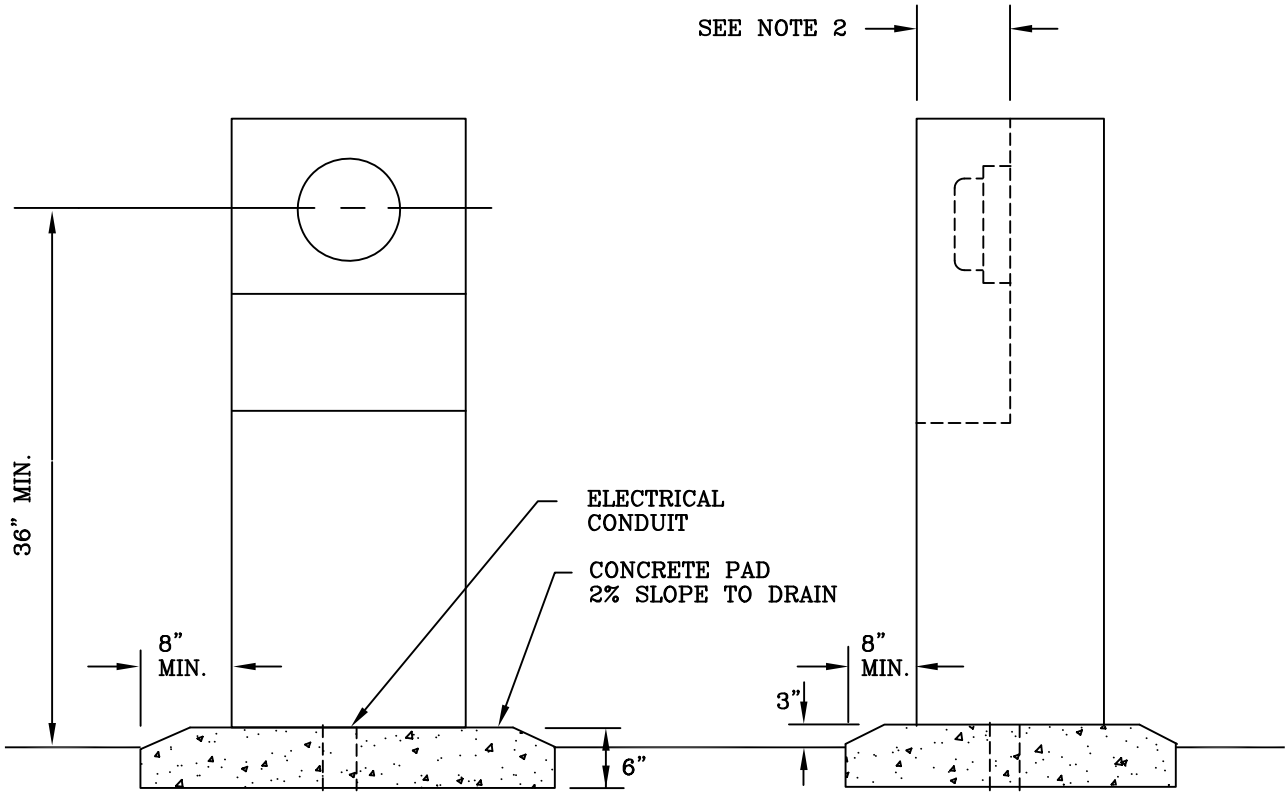

NOTES:

1. ALL ELECTRICAL INSTALLATIONS SHALL CONFORM TO CITY CODES, ORDINANCES, SOUTHERN CALIFORNIA EDISON COMPANY SPECIFICATIONS, AND REQUIRE SEPARATE ELETRICAL PERMIT AND INSPECTION. ALL ELECTRICAL EQUIPMENT SHALL BE NEMA, TYPE 3, WATERPROOFED FOR EXTERIOR INSTALLATION.

2. THE ENCLOSING COVER SHALL BE HINGED OR REMOVABLE FOR METER TESTING AND INSPECTION AND SHALL HAVE A READING WINDOW. FOR SINGLE PHASE SERVICES, THE MINIMUM METER RECESS IS NINE INCHES, AND FOR THREE PHASE SERVICES, ELEVEN INCHES.

3. WHERE IRRIGATION CONTROLLER AND ELECTRIC METER PEDESTAL ARE ADJACENT, THEY MAY BE INSTALLED ON SAME CONCRETE PAD.

4. ELECTRICAL CONDUITS MUST BE INSTALLED THROUGH THE BOTTOM OF CONCRETE PAD.

ELECTRICAL METER PEDESTAL

MARK CARROLL, R.C.E. 31515
CITY OF IRVINE - CITY ENGINEER

AUGUST 2013
DATE

STD. PLAN
840

SHEET 1 OF 1