Community Development cityofirvine.org

City of Irvine, 1 Civic Center Plaza, P.O. Box 19575, Irvine, California 92623-9575 949-724-6000

September 22, 2025

Ms. Sheena Habibian
Studio SSH
10021 Tabor Street
Los Angeles, CA 90034

Sent Via Email:
sheena@studiossh.com

Subject: Approval of Minor Modification 00965750-PCPM to Conditional Use Permit 00330325-PCPU for Avenue One Apartments located at 2100 Scholarship in Planning Area 36 (Irvine Business Complex)

Dear Ms. Habibian:

Community Development Department staff reviewed Minor Modification 00965750-PCPM to Conditional Use Permit 00330325-PCPU to remove wooden trellises on upper-level balconies at the Avenue One Apartments in Planning Area 36 (Irvine Business Complex [IBC]). The project site is located at 2100 Scholarship, designated Urban/Industrial in the Land Use Element of the General Plan, and zoned 5.3 IBC Residential.

On September 18, 2003, the Planning Commission approved Conditional Use Permit 00330325-PCPU for a 341-unit residential project on two separate lots. The approved project included a Contemporary Mediterranean architectural design featuring varied window sizes, diverse rooflines/parapets, decorative tiles, awnings, contrasting colors to articulate changes in building elevations, and wooden trellises at several upper-level balconies. Since then, the wooden trellises have significantly deteriorated due to age and weather exposure and were found to pose a safety concern for on-site users, as they could fall on site users. Upon removal, all impacted areas of the façade will be patched and repaired to ensure the site is safe, clean, and visually cohesive with the original design. This request does not propose any changes to the site layout, land use, landscaping, parking, or circulation.

Section 2-19-2 of the Irvine Zoning Ordinance contains criteria to determine when a proposed modification is classified as a “major modification.” A major modification must be reviewed by the original approving authority at a public hearing. However, where none of the criteria are met, the application is a “minor modification” and reviewed by the Director of Community Development.

Based on the submittal, the Director of Community Development determines that the proposed modification does not meet any of the five criteria to be classified as a major modification. Therefore, the project is a minor modification for the following reasons.

1. Proposed addition, deletion, and/or relocation of approved structures and/or land uses, which would cause significant or potentially significant environmental impacts, based on staff's analysis prepared in accordance with City policy.

   The proposed removal of the wooden trellises would not result in any potentially significant environmental impacts, as the scope is limited to the demolition of non-structural exterior elements (wooden trellises) and surface restoration. As such, the project is exempt from further environmental review per Section 15301, Class 1, Existing Facilities, of the California Environmental Quality Act (CEQA) Guidelines, which allows for minor alterations to existing facilities. Therefore, the proposed modification will not cause significant or potentially significant impacts.

2. Proposed addition, deletion and/or relocation of approved structures and/or land uses, which would cause significant or potentially significant on-site and off-site traffic impacts, based on staff's analysis of the transportation issues prepared in accordance with City policy

   The proposed removal of the wooden trellises and surface restoration would not pose any potentially significant on- or off-site traffic impacts, as the project does not propose any changes to the site layout, land use, or parking. Additionally, there will be no new construction or alterations to site circulation or access. Therefore, the proposed modification will not cause significant or potentially on-site or off-site traffic impacts.

3. The intent of the findings and conditions of approval for the approved project would not be preserved.

   Conditional Use Permit 00330325-PCPU allowed for the development of a 341-unit multifamily residential development designed in a Contemporary Mediterranean architectural style, including wooden trellises on upper-story balconies. The modification would remove the wooden trellises, which have deteriorated and pose onsite safety concerns. The removal of the trellises will not alter the approved Contemporary Mediterranean design, as the project would still incorporate key elements such as smooth stucco finishes, arched openings, varied window sizes, diverse rooflines/parapets, decorative tiles, awnings, and contrasting colors to articulate changes in building elevations. Therefore, the intent of the findings and conditions of approval for Conditional Use Permit 00330325- PCPU would be preserved and the project would continue to comply with the IBC design guidelines that were in place at the time of construction.

4. Proposed addition, deletion, and/or relocation of structures would result in an impact to or introduction of sensitive uses not previously considered within the site. This includes, but is not limited to, uses not previously considered such as childcare centers, schools, residences, and medical establishments

The proposed removal of the wooden trellises and surface restoration will not impact existing uses nor would it introduce new uses. Furthermore, the scope of the project is limited to the removal of wooden trellises and would not change the site layout, land use, landscaping, parking, or onsite circulation.

5. Reconfiguration of the site plan resulting in: a) a significant reduction of landscaping; or b) a significant change in parking

   The scope of the project is limited to the removal of wooden trellises and surface restoration. No changes to the site layout, land use, landscaping, or parking are proposed. Therefore, the proposed modification would not result in a significant reduction of landscaping or a change in parking.

Based on the information submitted with this application, the Director of Community Development makes the following finding pursuant to Section 2-19-7 of the Zoning Ordinance and hereby approves Minor Modification 00965750-PCPM.

1. The modification does not alter or affect the intent of the findings and conditions of the original project approval.

   Conditional Use Permit 00330325-PCPU allowed for the development of a 341-unit multifamily residential development exhibiting a Contemporary Mediterranean design, including wooden trellises on upper-level balconies. The proposed project is limited to the removal of the trellises and surface restoration to maintain safety for site users. The removal of these trellises will not impact the intent of the approved design, as the project would continue to exhibit core design elements such as smooth stucco finishes, arched openings, varied window sizes, diverse rooflines/parapets, decorative tiles, awnings, and contrasting colors to articulate changes in building elevations, as were required by the IBC design guidelines in place at the time of construction. Therefore, the proposed modification would not alter or affect the intent of the findings and conditions of the original project approval.

This approval is subject to the following conditions of approval:

<u>Standard Condition 6.1</u> DISCRETIONARY CASE CHARGES

The applicant is responsible for paying all charges related to the processing of this discretionary case application within 30 days of the issuance of the final invoice or prior to the issuance of building permits for this project, whichever occurs first. Failure to pay all charges shall result in delays in the issuance of required permits or may result in the revocation of the approval of this application.

Standard Condition 6.2 LEGAL ACTION – HOLD HARMLESS

In accordance with the provisions of Section 5-5-114 of the Irvine Municipal Code and Government Code Section 66474.9, the applicant shall defend, indemnify, and hold harmless the City of Irvine and its agents, officers, and employees from and against any claim, action, or proceeding against the City agency or its agents, officers, or employees to attack, set aside, void, or annul an approval by the City, including, without limitation, an action by an advisory agency, appeal board, or legislative body concerning this discretionary approval. This defense and indemnification shall include the payment of all legal costs incurred on behalf of the City in connection with the application, and the defense of any claim, action or proceeding challenging the approval. The City will promptly notify the applicant of any claim, action, or proceeding and will cooperate fully in the defense.

In the event a legal challenge to the discretionary approval is successful, and an award of attorney fees is made to the challenger, the applicant shall be responsible to pay the full amount of such an award.

Condition 6.19 CONSTRUCTION HOURS

Construction activities occurring as part of the Project shall be subject to the limitations and requirements of Section 6-8-205(a) of the Irvine Municipal Code which states that construction activities may occur between 7 a.m. and 7 p.m. Mondays through Fridays, and 9 a.m. and 6 p.m. on Saturdays. No construction activities shall be permitted outside of these hours, or on Sundays and Federal holidays, unless a temporary waiver is granted by the Chief Building Official or his/her authorized representative. Trucks, vehicles, and equipment that are making, or are involved with, material deliveries, loading or transfer of materials, equipment service, maintenance of any devices or appurtenances for or within any construction project in the City, shall not be operated or driven on City streets outside of these hours or on Sundays and Federal holidays, unless a temporary waiver is granted by the City. Any waiver granted shall take impact upon the community into consideration. No construction activity will be permitted outside of these hours except in emergencies, including maintenance work on the City rights-of-way that might be required.

Condition 6.20 COMPLIANCE WITH PRIOR CONDITIONS

All conditions of approval associated with Conditional Use Permit 00330325-PCPU shall remain in full force and effect.

Unless an appeal is filed prior to the expiration of the five-business-day appeal period ending at 5 p.m. Monday, September 29, 2025, the approval granted by this letter shall become effective Tuesday, September 30, 2025.

The stamped-approved plans for Minor Modification 00965750-PCPM are being transmitted electronically along with this letter. Should you wish to obtain a hard copy of the stamped-approved plans, please drop off a set of plans at the Planning Counter. Please note that permits cannot be issued until all fees associated with this application are paid in full.

Should you have any questions regarding this approval, please contact Consultant Planner Amir S. Rafiq at 949-724-7439 or by email at arafiq@cityofirvine.org.

Sincerely,

Stephanie Frady, AICP
Director of Community Development

Enclosures:

1. Approved Project Plans
2. CEQA Notice of Exemption

ec: Alyssa Matheus, Planning Manager
Ann Wuu, Principal Planner
File(s): 00330325-PCPU; 00965750-PCPM

THE CITY OF IRVINE

CITY OF IRVINE 1971

RESIDENTIAL ADDITION/ALTERATION PLANS

NOTE: DESIGNER TO PROVIDE PROJECT SPECIFIC INPUT WHERE INDICATED BY INSTRUCTIONS IN BOLD AND BRACKETED BY THE FOLLOWING SYMBOL <>

(VERSION 2022.3 EFFECTIVE NOVEMBER 2024)

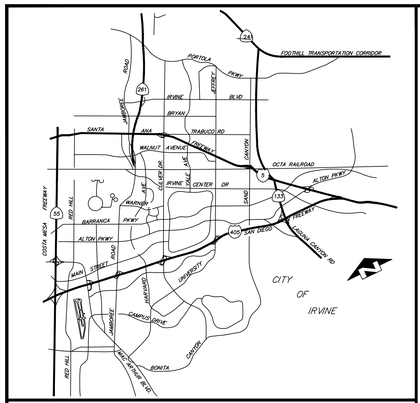

VICINITY MAP

LOCATION MAP

PROJECT INFORMATION REQUIREMENTS

PROJECT LOCATION: *2100 SCHOLARSHIP, IRVINE, CA 92614*

PROJECT DESCRIPTION: *REMOVE ALL EXISTING TRELLISES,PATCH AND REPAIR*

SPRINKLERS: *NO.* WHERE THE EXISTING BUILDING IS EQUIPPED WITH AUTOMATIC FIRE SPRINKLERS, ANY NEWLY CREATED LIVING, SLEEPING, EATING, COOKING, OR SANITATION AREA SHALL BE EQUIPPED WITH AUTOMATIC FIRE SPRINKLERS; INCLUDING, BUT NOT LIMITED TO, CONVERTED ATTICS, CARPORTS WITH NEW HABITABLE SPACE ABOVE, AND ENCLOSED PATIO COVERS/CALIFORNIA ROOMS.

ANY ADDITION OR MODIFICATION TO AN EXISTING FIRE SPRINKLER SYSTEM IS SUBJECT TO A SEPARATE APPROVAL AND PERMIT FROM THE ORANGE COUNTY FIRE AUTHORITY (OCFA).

CITY OF IRVINE MUNICIPAL CODE (IMC) AND INFO. BULLETINS (IB)

[NOTE: COMPLETE IMC TEXT IS AVAILABLE ON THE INTERNET AT WWW.MUNICODE.COM]

THE DESIGN AND CONSTRUCTION OF THIS PROJECT SHALL COMPLY WITH ALL APPLICABLE IRVINE MUNICIPAL CODE PROVISIONS AND/OR PUBLISHED INFORMATION BULLETINS INCLUDING BUT NOT LIMITED TO:

LIMITS OF PROJECT DURATION [IMC SECT. 5-9-205]

ABSOLUTE MAXIMUM DURATIONS FOR CONSTRUCTION PROJECTS RELATING TO EXISTING RESIDENCES:
- 18 MONTHS - APPLIES TO ANY IMPROVEMENT LOCATED ON A RESIDENTIAL PROPERTY CONTAINING A GROUP R-3 RESIDENTIAL BUILDING

THESE DURATIONS COMMENCE ON THE DAY A PERMIT IS ISSUED. PROJECTS FAILING TO FINISH ON TIME ARE SUBJECT TO LEGAL ACTION INCLUDING THE ASSESSMENT OF FINES. THE BUILDING OFFICIAL MAY GRANT ONE EXTENSION OF TIME FOR AN ADDITIONAL PERIOD NOT TO EXCEED SIX MONTHS. REQUEST FOR EXTENSION MUST BE COMPLETED IN WRITING.

LOT DRAINAGE AND EXTERIOR WALL REQUIREMENTS [IB 273]

LOTS SHALL SHEET FLOW AWAY FROM RESIDENCE A MINIMUM OF 5 FEET AT 2 PERCENT SLOPE. EXTERIOR WALL COVERING OF PLASTER OR STUCCO SHALL BE PROVIDED WITH A WEEP SCREED LOCATED AT OR BELOW THE FOUNDATION PLATE LINE, AND 4 INCHES ABOVE EARTH OR 2 INCHES ABOVE PAVEMENT.

SURVEY REQUIREMENTS TO ESTABLISH PROPERTY LINE SETBACKS [IB 302]

THE PROPOSED RESIDENTIAL ADDITION *IS* LOCATED WITHIN ONE FOOT OF A REQUIRED EXISTING SIDE, FRONT, AND/OR REAR YARD SETBACK AS DEFINED IN CITY OF IRVINE BULLETIN NO. 302.

SEE SHEET *<N/A>* FOR SITE SURVEY, PREPARED BY A CALIFORNIA-LICENSED LAND SURVEYOR OR CIVIL ENGINEER.

WATER CONSERVING PLUMBING FIXTURES [IB 321]

RESIDENTIAL BUILDINGS FOR WHICH AN INITIAL FINAL INSPECTION WAS RECEIVED ON OR BEFORE JANUARY 1, 1994 SHALL HAVE ALL NONCOMPLIANT PLUMBING FIXTURES REPLACED WITH WATER-CONSERVING PLUMBING FIXTURES IN ACCORDANCE WITH IB 321 OR SHALL BE SELF-CERTIFIED USING THE CITY WATER CONSERVING PLUMBING FIXTURE CERTIFICATION FORM.

ATTIC AND UNDERFLOOR VENT COVERS [IMC SECT. 5-9-401 E. & 5-9-402 L.]

ALL NEW ROOF AND UNDER-FLOOR VENT OPENINGS SHALL BE COVERED WITH NON-COMBUSTIBLE, CORROSION RESISTANT, METAL WIRE MESH OR OTHER MATERIALS HAVING OPENINGS OF 1/16 INCH MINIMUM TO 1/8 INCH MAXIMUM. (CBC 706A.2) SEE DETAIL *<NO NEW ROOF>*

ROOFING [IMC SECT. 5-9-401 F. & 5-9-402 M.]

ALL NEW ROOF COVERING MATERIAL SHALL BE CLASS A AS TESTED IN ACCORDANCE WITH UL 790 OR ASTM E108.

SECURITY DESIGN STANDARDS [IMC SECT. 5-9-501 THROUGH 5-9-520]

SEE SHEET *<N/A>* FOR APPLICABLE COMPLETED SECURITY CODE PROVISIONS.

CONSTRUCTION WASTE [IMC SECT. 6-7]

RECYCLING OF MATERIALS SHALL CONFORM TO THE CONSTRUCTION AND DEMOLITION MATERIALS RECYCLING REQUIREMENTS OF THE CITY OF IRVINE MUNICIPAL CODE (IMC) SECTIONS 6-7-1001 THROUGH 6-7-1012.

CONSTRUCTION WORK HOURS [IMC SECT. 6-8-205]

MON-FRI 7 AM TO 7 PM
SAT 9 AM TO 6 PM
NO WORK ON SUNDAYS OR FEDERAL HOLIDAYS

SPECIAL INSPECTION

THIS PROJECT IS SUBJECT TO THE FOLLOWING SPECIAL INSPECTIONS PER CALIFORNIA BUILDING CODE (CBC) CHAPTER 17 AND SHALL FOLLOW THE REQUIREMENTS AS DEFINED IN CITY OF IRVINE INFORMATION BULLETIN NO. 278:
IB 181 INCLUDES CITY OF IRVINE SPECIAL INSPECTION REQUIREMENTS FOR CONCRETE PLACEMENT IN FOUNDATIONS AND SLAB ON GRADE FOR RESIDENTIAL PROJECTS.

<"N/A">

VERY HIGH FIRE HAZARD SEVERITY (VHFHS) AREA (CRC SECTION R337)

<THE FOLLOWING REQUIREMENTS ARE NOT APPLICABLE AS THE PROJECT IS NOT WITHIN A VERY HIGH FIRE HAZARD SEVERITY ZONE>

FOR APPROVED FIRE PROTECTION PLAN, SEE *<N/A>*

FOR ADDITIONAL INFORMATION, CALL 949-724-6522 OR 949-724-6524.

NATURAL GAS SYSTEM GENERAL NOTES

1. ACCEPTABLE PIPE MATERIALS:
- BLACK STEEL SCHEDULE 40 - ASME B36.10, ASTM A53, OR ASTM A106.
- ALUMINUM ALLOY - ASTM B241. MUST BE COATED TO PROTECT AGAINST EXTERNAL CORROSION; NOT ALLOWED IN EXTERIOR LOCATIONS OR UNDERGROUND.
- CORRUGATED STAINLESS STEEL - CSA LC-1
- POLYETHYLENE (PE) PLASTIC - ASTM D2513. ALLOWED FOR INSTALLATION OUTDOORS, UNDERGROUND ONLY; INSTALL TRACER WIRE (THICKNESS AWG 14) TO FACILITATE LOCATING.
2. METALLIC PIPE JOINTS AND FITTINGS SHALL BE THREADED, FLANGED, BRAZED, WELDED, OR PRESS-CONNECT FITTINGS. (CPC 1208.6.10.1)
3. PLASTIC PIPE JOINTS AND FITTINGS SHALL BE INSTALLED IN ACCORDANCE WITH THE MANUFACTURER'S INSTALLATION INSTRUCTIONS. (CPC 1208.6.11)
4. UNDERGROUND PIPING INSTALLATION:
- METALLIC PIPING IS PROHIBITED FOR UNDERGROUND INSTALLATION IN THE CITY OF IRVINE.
- MINIMUM 18 INCHES BELOW GROUND. (CPC 1210.1.1)
- WHERE INSTALLED THROUGH THE OUTER FOUNDATION OR BASEMENT WALL, ENCASE IN A PROTECTIVE SLEEVE. THE SPACE BETWEEN THE PIPE AND THE SLEEVE, AND THE SLEEVE AND THE WALL MUST BE SEALED. (CPC 1210.1.5)
- WHERE INSTALLED UNDERGROUND BENEATH BUILDINGS, ENCASE IN A CONDUIT DESIGNED TO WITHSTAND THE IMPOSED LOADS. (CPC 1210.1.6)
5. APPLIANCES CONNECTED TO THE GAS PIPING SYSTEM SHALL HAVE AN ACCESSIBLE MANUAL SHUT-OFF VALVE EACH SERVING A SINGLE APPLIANCE AND INSTALLED WITHIN 6 FEET OF THE APPLIANCE IT SERVES. (CPC 1212.6)

CALIFORNIA BUILDING ENERGY EFFICIENCY STANDARDS

PROVISIONS OF THE CALIFORNIA BUILDING ENERGY EFFICIENCY STANDARD APPLY TO THIS PROJECT. SEE SHEET *<N/A>* FOR COMPLETE COMPLIANCE DOCUMENTATION.

CALIFORNIA GREEN BUILDING STANDARDS CODE

PROVISIONS OF THE CALIFORNIA GREEN BUILDING STANDARDS CODE APPLY TO ALL RESIDENTIAL ALTERATIONS THAT INCREASE THE BUILDING'S CONDITIONED AREA, VOLUME, OR SIZE. SEE SHEET *<N/A>* FOR APPLICABLE GREEN BUILDING STANDARDS NOTES AND REQUIREMENTS.

PRE-CONSTRUCTION MEETING REQUIREMENT

ALL CONSTRUCTION PROJECTS INVOLVING ADDITIONS TO RESIDENTIAL STRUCTURES OVER 500 SQ.FT. SHALL NOT COMMENCE UNTIL A PRE-CONSTRUCTION MEETING HAS BEEN HELD. THESE MEETINGS, WHILE NOT REQUIRED BY CITY CODE FOR RESIDENTIAL IMPROVEMENTS, ARE BENEFICIAL FOR THIS TYPE OF RESIDENTIAL ADDITIONS. TO SCHEDULE A PRE-CONSTRUCTION MEETING, PLEASE CONTACT THE RESIDENTIAL INSPECTIONS SUPERVISOR AT (949)724-6666.

KITCHEN REMODEL GENERAL NOTES

1. THE MAXIMUM FLOW RATE STANDARD FOR NEW SINK FAUCETS SHALL BE 1.8 GPM AT 60 PSI. IN COMPLIANCE WITH THE CALIFORNIA PLUMBING CODE.

KITCHEN RANGE HOOD AIRFLOW RATES

1. CALIFORNIA ENERGY CODE (CEnC) TABLE 150.0-G: KITCHEN RANGE HOOD AIRFLOW RATES (CFM) AND ASTM E3087 CAPTURE EFFICIENCY (CE) RATINGS ACCORDING TO DWELLING UNIT FLOOR AREA AND KITCHEN RANGE FUEL TYPE.

DWELLING UNIT FLOOR AREA (ft^2)	HOOD OVER ELECTRIC RANGE	HOOD OVER NATURAL GAS RANGE
> 1500	50% CE or 110 cfm	70% CE or 180 cfm
> 1000 - 1500	50% CE or 110 cfm	80% CE or 250 cfm
750 - 1000	55% CE or 130 cfm	85% CE or 280 cfm
< 750	65% CE or 160 cfm	85% CE or 280 cfm

KITCHEN LIGHTING

1. ALL NEW OR ALTERED LIGHTING SHALL COMPLY WITH CURRENT MANDATORY FEATURES PER CALIFORNIA ENERGY CODE (CEnC) SECTION 150.0(k).
2. ALL NEW AND ALTERED LUMINAIRES SHALL BE HIGH EFFICACY IN ACCORDANCE WITH CEnC TABLE 150.0-A.
3. RECESSED DOWN-LIGHT LUMINAIRES INSTALLED IN INSULATED CEILINGS SHALL BE PROVIDED WITH ZERO RECESS INSULATION CONTACT (IC) LISTED BY UNDERWRITERS LABORATORY (UL) OR EQUIVALENT AND AIR TIGHT (AC) LABEL FIXTURES.
4. LED LUMINAIRES SHALL BE INSTALLED IN LED FIXTURES RATED FOR THE SPECIFIC WATTAGE.
5. LIGHTING FROM ADJACENT KITCHEN AREA SUCH US DINING AND NOOK AREAS SHALL HAVE SEPARATE CONTROLS IF NOT PART OF THE AREA OF REMODEL.

KITCHEN ELECTRICAL OUTLETS

1. ALL ELECTRICAL 125V THROUGH 250V OUTLETS INSTALLED TO SERVE THE COUNTERTOP SURFACE IN A KITCHEN OR WITHIN 6 FT FROM THE TOP INSIDE EDGE OF THE SINK BOWL SHALL HAVE GROUND-FAULT CIRCUIT-INTERRUPTER PROTECTION (GFCI) PER CEC 210.8 (A)(6)(7).
2. ALL 120-VOLT, SINGLE-PHASE, 15- AND 20-AMP BRANCH CIRCUITS SUPPLYING OUTLETS OR DEVICES IN KITCHENS SHALL BE PROTECTED BY A LISTED COMBINATION-TYPE ARC-FAULT CIRCUIT INTERRUPTER, INSTALLED TO PROVIDE PROTECTION OF THE ENTIRE BRANCH CIRCUIT, OR BY OTHER METHOD IN ACCORDANCE WITH CEC 210.12(A). (CEC 210.12(A)(1))
3. RECEPTACLE OUTLETS SHALL BE INSTALLED ON OR WITHIN 20 INCHES ABOVE COUNTERTOPS AND WORK SURFACES SUCH THAT:
   3.1. NO POINT ALONG THE WALL LINE ADJACENT TO COUNTERTOPS AND WORK SURFACES AT LEAST 12 INCHES IN WIDTH IS MORE THAN 24 HORIZONTAL INCHES FROM A RECEPTACLE OUTLET. COUNTERTOP BEHIND A RANGE OR SINK IS EXEMPT UNLESS SUCH COUNTERTOP IS AT LEAST 12 INCHES WIDE OR 18 INCHES WIDE FOR A CORNER INSTALLATION.
   3.2. AT LEAST ONE RECEPTACLE SHALL BE INSTALLED AT EACH ISLAND OR PENINSULAR COUNTERTOP SPACE WITH A LONG DIMENSION OF AT LEAST 24 INCHES AND A SHORT DIMENSION OF AT LEAST12 INCHES. (CEC 210.52(C))
4. AT LEAST ONE GFCI PROTECTED RECEPTACLE OUTLET SHALL BE INSTALLED AT EACH ISLAND COUNTERTOP WITH A LONG DIMENSION OF 2 FEET OR GREATER AND A SHORT DIMENSION OF 12 INCHES OR GREATER PER CEC SECTION 210.52(C)(2).
5. AT LEAST ONE GFCI PROTECTED RECEPTACLE OUTLET IS TO BE INSTALLED AT EACH PENINSULAR COUNTERTOP WITH A LONG DIMENSION OF 3 FEET OR GREATER AND A SHORT DIMENSION OF 12 INCHES OR GREATER PER CEC 210.52(C)(3).
6. RECEPTACLE OUTLETS SHALL BE LOCATED ON OR ABOVE, BUT NO MORE THAN 20 INCHES ABOVE THE COUNTER TOP PER CEC 210.52(C)(3)(1).
7. PROVIDE A MINIMUM OF TWO 20 AMPS SMALL APPLIANCE BRANCH CIRCUITS FOR RECEPTACLES IN THE KITCHEN PER CEC 210.11(C)(1).

BATHROOM REMODEL GENERAL NOTES

1. THE MAXIMUM FLOW RATE STANDARDS FOR NEW PLUMBING FIXTURES SET BY THE CALIFORNIA GREEN BUILDING STANDARDS CODE (CGBSC 4.303) ARE AS FOLLOWS:
   A. WATER CLOSETS 1.28 GALLONS PER FLUSH (SEE NOTE 2)
   B. SHOWER HEADS 1.8 GPM @ 80 PSI (SEE NOTE 1)
   C. LAVATORY FAUCETS 1.2 GPM @ 60 PSI

   NOTES:
   (1) WHEN SHOWER IS SERVED BY MORE THAN ONE SHOWER HEAD, THE COMBINED FLOW RATE OF ALL SHOWER HEADS AND/OR OTHER SHOWER OUTLETS CONTROLLED BY A SINGLE VALVE SHALL NOT EXCEED 1.8 GALLONS PER MINUTE AT 80 PSI OR THE SHOWER SHALL BE DESIGNED TO ALLOW ONLY ONE SHOWER OUTLET TO BE IN OPERATION AT ONE TIME.
   (2) THE EFFECTIVE FLUSH VOLUME OF DUAL FLUSH TOILETS IS DEFINE AS THE COMPOSITE, AVERAGE FLUSH VOLUME OF TWO REDUCED FLUSHES AND ONE FULL FLUSH.
2. BATHTUB AND SHOWER FLOORS, WALLS ABOVE BATHTUBS WITH INSTALLED SHOWER HEADS, AND SHOWER COMPARTMENTS SHALL BE FINISHED WITH A NONABSORBENT SURFACE TO A HEIGHT OF 72 INCHES ABOVE THE FLOOR. (CRC R307)
3. ALL GLAZING LESS THAN 60 INCHES ABOVE A SHOWER OR TUB FLOOR SHALL BE SAFETY GLAZING TYPE. (CRC R308.4.5)
4. ALL 125-VOLT, SINGLE-PHASE, 15- AND 20-AMP BATHROOM RECEPTACLES SHALL HAVE GROUND-FAULT CIRCUIT INTERRUPTER (CFCI) PROTECTION.
5. BATHROOM BRANCH CIRCUITS: AT LEAST ONE 120-VOLT, 20-AMP BRANCH CIRCUIT SHALL BE PROVIDED TO SUPPLY BATHROOM RECEPTACLE OUTLETS. OTHER EQUIPMENT, SUCH US LIGHTING, EXHAUST FANS) WITHIN THE SAME BATHROOM MAY BE SUPPLIED BY THE SAME BRANCH CIRCUIT WHERE THE BRANCH CIRCUIT SUPPLIES A SINGLE BATHROOM ONLY (CEC 210.11(C)(3)).
6. BATHROOM ELECTRICAL OUTLETS: AT LEAST ONE RECEPTACLE OUTLET SHALL BE INSTALLED IN BATHROOMS WITHIN 3 FEET OF THE OUTSIDE EDGE OF EACH BASIN. THE RECEPTACLE OUTLET SHALL BE LOCATED ON A WALL OR PARTITION THAT IS ADJACENT TO THE BASIN OR BASIN COUNTERTOP. OR INSTALLED ON THE SIDE OR FACE OF THE BASIN CABINET. IN NO CASE SHALL THE RECEPTACLE BE LOCATED MORE THAN 12 INCHES BELOW THE TOP OF THE BASIN (CEC 210.52 (D)).
7. RECEPTACLES AT BATHTUBS AND SHOWER SPACES SHALL NOT BE INSTALLED WITHIN 3 FEET HORIZONTAL AND 8 FEET VERTICAL FROM THE TOP OF THE BATHTUB RIM OR THE SHOWER THRESHOLD. (CEC 406.9(C))
8. PRIVATE BATHROOMS WITH A BATHTUB OR SHOWER SHALL BE PROVIDED WITH ENERGY STAR COMPLIANT EXHAUST FANS CONTROLLED BY A HUMIDITY CONTROL, AND HAVING A MINIMUM CAPACITY OF 20 CFM CONTINUOUS OR 50 CFM INTERMITTENT. (CMC TABLE 403.7, CGBSC 4.506.1)
9. WATER CLOSETS AND BIDETS SHALL BE INSTALLED A MINIMUM OF 15 INCHES FROM ANY WALL OR OBSTRUCTION MEASURED TO THE CENTERLINE OF THE FIXTURE, AND 30 INCHES TO A SIMILAR FIXTURE MEASIRED CENTERLINE TO CENTERLINE. THE CLEAR FLOOR SPACE IN FRONT OF A WATER CLOSET, LAVATORY, OR BIDET SHALL BE NOT LESS THAN 24 INCHES. (CPC 402.5)
10. FIXTURES HAVING CONCEALED SLIP JOINT CONNECTIONS SHALL BE PROVIDED WITH AN ACCESS PANEL OR UTILITY SPACE NOT LESS THAN 12 INCHES IN ITS LEAST DIMENSION. (CPC 402.10)
11. SHOWERS SHALL HAVE A WASTE OUTLET AND FIXTURE TAILPIECE (P-TRAP) NOT LESS THAN 2 INCHES IN DIAMETER. (CPC 408.4)
12. SHOWER THRESHOLD (WHERE PROVIDED) SHALL BE OF SUFFICIENT WIDTH TO ACCOMMODATE A MINIMUM 22 INCHES DOOR. SHOWER DOOR SHALL OPEN SO AS TO MAINTAIN NOT LESS THAN 22 INCHES UNOBSTRUCTED OPENING FOR EGRESS. (CPC 408.5)
13. SHOWER COMPARTMENTS, REGARDLESS OF THE SHAPE, SHALL HAVE A MINIMUM FINISHED INTERIOR OF 1024 SQUARE INCHES AND SHALL ALSO BE CAPABLE OF ENCOMPASSING A 30 INCH CIRCLE. (CPC 408.6)
14. CONTROL VALVES AND SHOWERHEADS SHALL BE LOCATED ON THE SIDEWALL OF SHOWER COMPARTMENTS OR OTHERWISE ARRANGED SO THAT THE SHOWERHEAD DOES NOT DISCHARGE DIRECTLY AT THE ENTRANCE OF THE COMPARTMENT. (CPC 408.9)
15. WHERE TWO SEPARATE HANDLES CONTROL THE HOT AND COLD WATER, THE LEFT-HANDED HANDLE SHALL CONTROL HOT WATER. (CPC 417.5)
16. THE NUMBER OF WATER CLOSETS SERVED BY A 3-INCH DRAIN SHALL NOT EXCEED FIVE. (CPC TABLE 703.2)
17. NEWLY INSTALLED LUMINAIRES IN A BATHROOM:
   17.1. SHALL BE HIGH EFFICACY AND MEET THE APPLICABLE REQUIREMENTS OF CEnC TABLE 150.0-A. (CEnC 150.0(k)1.A)
   17.2. WHEN RECESSED, SHALL BE LISTED FOR ZERO CLEARANCE, LABELED TO CERTIFY AIR LEAKAGE LESS THAN 2 CFM, SEALED WITH A GASKET OR CAULK BETWEEN THE HOUSING AND THE CEILING, AND SHALL NOT CONTAIN SCREW BASE SOCKETS. (CEnC 150.0(k)1.C)
   17.3. SHALL BE CONTROLLED SEPARATELY FROM EXHAUST FANS. (CEnC 150.0(k)2.G)
   17.4. SHALL HAVE READILY ACCESSIBLE WALL-MOUNTED CONTROLS ALLOWING THE LIGHTS TO BE MANUALLY TURNED ON AND OFF. (CEnC 150.0(k)2.A)
   17.5. SHALL NOT HAVE CONTROLS THAT BYPASS A DIMMER, OCCUPANT SENSOR, OR VACANCY SENSOR. (CEnC 150.0(k)2.B)
   17.6. SHALL HAVE AT LEAST ONE LUMINAIRE CONTROLLED BY AN OCCUPANT OR VACANCY SENSOR PROVIDING AUTOMATIC-OFF FUNCTIONALITY. (CEnC 150.0(k)2.E.i)
   17.7. THAT ARE OR CONTAIN LIGHT SOURCES THAT MEET REFERENCE JOINT APPENIDIX JA8 REQUIREMEMENTS FOR DIMMING, AND THAT ARE NOT CONTROLLED BY AN OCCUPANT OR VACANCY SENSOR, SHALL HAVE DIMMING CONTROLS. (CEnC 150.0(k)2.D)

OUTDOOR COOKING APPLIANCE

REFER TO CALIFORNIA MECHANICAL CODE SECTION 923.0 FOR OUTDOOR COOKING APPLIANCES.
923.1 LISTED UNITS: LISTED OUTDOOR COOKING APPLIANCES SHALL BE INSTALLED IN ACCORDANCE WITH THEIR LISTING AND THE MANUFACTURER'S INSTALLATION INSTRUCTION.
923.2 UNLISTED UNITS: UNLISTED OUTDOOR COOKING APPLIANCES SHALL BE INSTALLED OUTDOORS WITH CLEARANCES TO COMBUSTIBLE MATERIALS OF NOT LESS THAN 36 INCHES AT THE SIDES AND BACK AND NOT LESS THAN 48 INCHES AT THE FRONT. IN NO CASE SHALL THE APPLIANCE BE LOCATED UNDER OVERHEAD COMBUSTIBLE CONSTRUCTION.

OUTDOOR DECORATIVE APPLIANCES

REFER TO CALIFORNIA MECHANICAL CODE SECTION 932.0 FOR OUTDOOR OPEN FLAME DECORATIVE APPLIANCES.
932.1.1 LISTED UNITS: LISTED OUTDOOR OPEN FLAME DECORATIVE APPLIANCES SHALL BE INSTALLED IN ACCORDANCE WITH THE MANUFACTURER'S INSTALLATION INSTRUCTION (NFPA 54:10:32.1)
932.1.2 UNLISTED UNITS: UNLISTED OUTDOOR OPEN FLAME DECORATIVE APPLIANCES SHALL BE INSTALLED OUTDOORS IN ACCORDANCE WITH THE MANUFACTURER'S INSTALLATION AND CLEARANCES TO COMBUSTIBLE MATERIALS OR NOT LESS THAN 36 INCHES FROM THE SIDES. IN NO CASE SHALL THE APPLIANCE BE LOCATED UNDER OVERHEAD COMBUSTIBLE CONSTRUCTION. (NFPA 54:10.32.2)

DOOR /WINDOW REPLACEMENT

REPLACEMENTS OF DOORS AND WINDOWS HAVING THE SAME DIMENSIONS OF THOSE BEING REPLACED SHALL MEET REQUIREMENTS FOR WEATHER PROOFING, SECURITY AND ENERGY EFFICIENCY.
REPLACEMENT OF EXTERIOR DOORS AND WINDOWS SHALL BE IN COMPLIANCE WITH SECURITY REQUIREMENTS DESCRIBED IN CITY OF IRVINE MUNICIPAL CODE SECTIONS 5-9-511 THRU 5-9-516.
CALIFORNIA ENERGY CODE (CEnC) SECTION 150.2(b)1.B REQUIRES DOORS/WINDOWS TO MEET U-FACTOR AND SOLAR HEAT GAIN COEFFICIENT (SHGC) IN PRESCRIPTIVE STANDARDS. PER TABLE 150.1A CLIMATE ZONE 8 REQUIREMENTS ARE AS FOLLOW:
- MAXIMUM U-FACTOR = 0.30
- MAXIMUM SHGC = 0.23
- MAXIMUM TOTAL AREA = 20%
- MAXIMUM WEST FACING AREA = 5%

SPACE CONDITIONING SYSTEM CHANGE OUT

FOR REQUIREMENTS FOR ALTERATIONS MADE TO RESIDENTIAL SPLIT SYSTEM AIR CONDITIONER CONDENSING UNIT, HEATING OR COOLING COIL OR FURNACE HEAT EXCHANGER REPLACEMENT, REFER TO IB 310.
ENTIRELY NEW OR COMPLETE REPLACEMENT OF SPACE-CONDITIONING SYSTEM SHALL BE PROVIDED WITH THE FOLLOWING:
- ALL NEW EQUIPMENT SHALL BE CERTIFIED WITH THE CALIFORNIA ENERGY COMMISSION.
- A/C EFFICIENCY:CENTRAL, SINGLE PHASE AIR CONDITIONERS AND AIR SOURCE HEAT PUMPS SHALL HAVE A MINIMUM SEASONAL ENERGY EFFICIENCY RATIO (SEER) OF 14.
- GAS-FIRED FURNACE EFFICIENCY SHALL BE AN ANNUAL FUEL UTILIZATION (AFUE) OF 80% FOR UNITS HAVING CAPACITY LESS THAN 225,000 BTU/H AND AN 81% FOR UNITS HAVING CAPACITY EQUAL OR GREATER THAN 225,000 BTU/H.
- SETBACK CAPABILITY THERMOSTAT THAT ALLOWS THE BUILDING OCCUPANT TO PROGRAM THE TEMPERATURE SET-POINTS FOR AT LEAST FOUR PERIODS WITHIN 24 HOURS.
- ALL DUCTS LOCATED IN UNCONDITIONED SPACE SHALL BE PROVIDED WITH DUCT INSULATION R-8.
- HOSE INSULATION: FOR SPLIT SYSTEM AIR CONDITIONERS THE SUCTION LINE ONLY REQUIRES INSULATION HAVING A THICKNESS OF 0.75 INCHES FOR LINES HAVING A DIAMETER LESS THAN 1.5 INCHES AND A THICKNESS OF 1 INCH FOR LINES HAVING A DIAMETER OF 1.50 INCHES OR MORE. INSULATION MUST BE SUITABLE FOR OUTDOOR USE AND BE PROTECTED AGAINST DAMAGE FROM SUNLIGHT, MOISTURE, EQUIPMENT MAINTENANCE AND WIND.
- SEALING OF ALL DUCTS PART OF THE AIR DISTRIBUTION AND LEAKING TESTING. NOTE THAT IN RESIDENTIAL DUCT SYSTEM LEAKAGE TO OUTSIDE SHALL NOT EXCEED 5%OF THE NOMINAL SYSTEM AIRFLOW.

REFER TO IB 310 FOR TESTING AND INSPECTION REQUIREMENTS.

MECHANICAL VENTS AND EXHAUST TERMINATIONS AT ZERO LOT LINES AND YARD EASEMENTS

REFER TO CITY OF IRVINE INFORMATIONAL BULLETIN NO. 325 THAT PROHIBITS MECHANICAL APPLIANCES AND THEIR VENTS AND EXHAUSTS TERMINATIONS AT SUCH EASEMENTS.

SMOKE ALARM AND CARBON MONOXIDE ALARM REQUIREMENTS

WHERE ALTERATIONS, REPAIRS, OR ADDITIONS REQUIRING BUILDING PERMIT OCCUR, OR WHERE ONE OR MORE SLEEPING ROOMS ARE ADDED OR CREATED IN EXISTING DWELLINGS, THE INDIVIDUAL DWELLING UNIT SHALL BE EQUIPPED WITH SMOKE ALARMS LOCATED AS REQUIRED FOR NEW DWELLINGS. (CRC R314)

FOR EXISTING BUILDINGS AND NEW CONSTRUCTION, CARBON MONOXIDE ALARMS SHALL BE PROVIDED IN DWELLING UNITS CONTAINING A FUEL-FIRE APPLIANCE OR FIREPLACE, OR THAT HAS AN ATTACHED GARAGE WITH AN OPENING THAT COMMUNICATES WITH THE DWELLING UNIT. (CRC R315)

POOL AND SPA NOTES

FOR GENERAL NOTES FOR SWIMMING POOLS AND SPAS, REFER TO https://irvineca.seamlessdocs.com/f/CO20091000179472527.

STORMWATER POLLUTION PREVENTION NOTES

STORMWATER POLLUTION PREVENTION DEVICES AND PRACTICES SHALL BE INSTALLED AND/OR INSTITUTED AS NECESSARY TO ENSURE COMPLIANCE TO THE CITY OF IRVINE WATER QUALITY STANDARDS CONTAINED IN CHAPTER 3. WATER, OF DIVISION 8 OF TITLE 6 OF THE IRVINE MUNICIPAL CODE AND ANY EROSION CONTROL PLAN ASSOCIATED WITH THIS PROJECT. ALL SUCH DEVICES AND PRACTICES SHALL BE MAINTAINED, INSPECTED AND/OR MONITORED TO ENSURE ADEQUACY AND PROPER FUNCTION THROUGHOUT THE DURATION OF THE CONSTRUCTION PROJECT.

COMPLIANCE TO THE WATER QUALITY STANDARDS AND ANY EROSION AND SEDIMENT CONTROL PLAN ASSOCIATED WITH THIS PROJECT INCLUDES, BUT IS NOT LIMITED TO THE FOLLOWING REQUIREMENTS:

1. AN EFFECTIVE COMBINATION OF EROSION AND SEDIMENT CONTROL MEASURES (BMPs) SHALL BE IMPLEMENTED TO PROTECT THE EXPOSED PORTIONS OF THE SITE FROM EROSION AND TO PREVENT SEDIMENT DISCHARGES.
2. SEDIMENTS AND OTHER POLLUTANTS SHALL BE RETAINED ON SITE UNTIL PROPERLY DISPOSED OF, AND MAY NOT BE TRANSPORTED FROM THE SITE VIA SHEET FLOW, SWALES, AREA DRAINS, NATURAL DRAINAGE COURSES OR WIND.
3. STOCKPILES OF EARTH AND OTHER CONSTRUCTION-RELATED MATERIALS SHALL BE PROTECTED FROM BEING TRANSPORTED FROM THE SITE BY THE FORCES OF WIND AND WATER FLOW.
4. FUELS, OILS, SOLVENTS, AND OTHER TOXIC MATERIALS SHALL BE STORED IN ACCORDANCE WITH THEIR LISTING AND ARE NOT TO CONTAMINATE THE SOIL AND SURFACE WATERS. ALL APPROVED STORAGE CONTAINERS ARE TO BE PROTECTED FROM THE WEATHER. SPILLS MUST BE CLEANED UP IMMEDIATELY AND DISPOSED OF IN A PROPER MANNER. SPILLS MAY NOT BE WASHED INTO THE DRAINAGE SYSTEM, NOR BE ALLOWED TO SETTLE OR INFILTRATE INTO SOIL.
5. EXCESS OR WASTE CONCRETE MAY NOT BE WASHED INTO THE PUBLIC WAY OR ANY OTHER DRAINAGE SYSTEM. PROVISIONS SHALL BE MADE TO RETAIN CONCRETE WASTES ON SITE UNTIL THEY CAN BE DISPOSED OF AS SOLID WASTES.
6. TRASH AND CONSTRUCTION SOLID WASTES SHALL BE DEPOSITED INTO A COVERED RECEPTACLE TO PREVENT CONTAMINATION OF RAINWATER AND DISPERSAL BY WIND.
7. SEDIMENTS AND OTHER MATERIALS MAY NOT BE TRACKED FROM THE SITE BY VEHICULAR TRAFFIC. THE CONSTRUCTION ENTRANCE ROADWAYS MUST BE STABILIZED SO AS TO INHIBIT SEDIMENTS FROM BEING DEPOSITED INTO THE PUBLIC WAY. ACCIDENTAL DEPOSITS SHALL BE SWEPT UP IMMEDIATELY AND MAY NOT BE WASHED DOWN BY RAIN OR OTHER MEANS.
8. STORMWATER POLLUTION PREVENTION DEVICES AND/OR PRACTICES SHALL BE MODIFIED AS NEEDED AS THE PROJECT PROGRESSES TO ENSURE EFFECTIVENESS.

APPLICABLE STATE CODES (WITH CITY OF IRVINE AMENDMENTS)

CALIFORNIA BUILDING CODE	2022
CALIFORNIA RESIDENTIAL CODE	2022
CALIFORNIA GREEN BUILDING STANDARDS CODE	2022
CALIFORNIA MECHANICAL CODE	2022
CALIFORNIA ELECTRICAL CODE	2022
CALIFORNIA PLUMBING CODE	2022
CALIFORNIA BUILDING ENERGY EFFICIENCY STANDARDS	2022

DEFERRED SUBMITTALS

THIS PROJECT HAS BEEN PERMITTED WITHOUT REVIEW AND/OR APPROVAL OF THE FOLLOWING DEFERRED SUBMITTALS. PLANS APPROVED BY THE CITY SHALL BE OBTAINED FOR EACH DEFERRED ITEM LISTED BELOW PRIOR TO COMMENCING ANY WORK WITHIN THE SCOPE OF SUCH DEFERRAL. DEFERRALS MUST BE REVIEWED AND ACCEPTED BY THE ARCHITECT OR ENGINEER OF RECORD PRIOR TO SUBMITTING FOR REVIEW WITH THE CITY.
<N/A>

FOR EXAMPLE:
- *HAND RAILS/GUARD RAILS*
- *WOOD TRUSSES*

SOUTH COAST AIR QUALITY MANAGEMENT DISTRICT

BE ADVISED, SOUTH COAST AIR QUALITY MANAGEMENT DISTRICT (SCAQMD) RULE 1403 GOVERNS W

AVENUE ONE - CAMPUS CENTER
MULTI-FAMILY APARTMENTS - 1100/2100 BUILDINGS
TRELLIS REMOVAL

2100 SCHOLARSHIP
IRVINE, CA 92614

VICINITY MAP

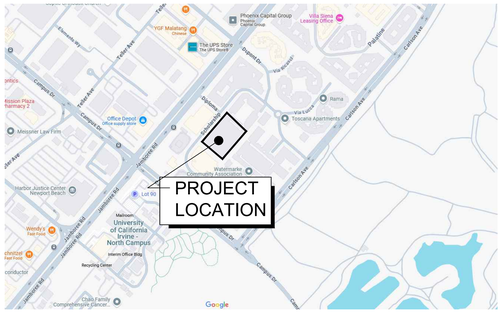

CONTACTS

OWNER

PMP MANAGEMENT
100 PACIFICA, STE 210
IRVINE, CA 92618

ARCHITECT

SHEENA HABIBIAN, AIA

STUDIO SSH
10021 TABOR ST.
LOS ANGELES, CA 90034
702-460-8610

GENERAL CONTRACTOR

SILVA DESIGN AND CONSTRUCTION, INC.
C/O GEOVANNY SILVA
570 E WOODBURY RD.
PASADENA, CA 91104

SHEET INDEX

ARCHITECTURAL

	CITY OF IRVINE COVERPAGE
A0.1	TITLE PAGE
A0.2	NOTES, SPECIFICATIONS, LEGENDS & ABBREVIATIONS
A0.3	GENERAL NOTES & SPECIFICATIONS
A1.0	SITE PLAN (FOR REFERENCE ONLY)
A2.0	TYPICAL TRELLIS PLAN
A2.5	EXISTING BUILDING LOWER ROOF PLAN
A3.0	EXISTING EXTERIOR ELEVATIONS
A3.1	PROPOSED EXTERIOR ELEVATIONS
A5.1	TYPICAL TRELLIS DETAIL (FOR REFERENCE)

GENERAL NOTES

1. OWNER AND CONTRACTOR SHALL VERIFY ALL CONDITIONS AND DIMENSIONS AT THE JOB SITE AND NOTIFY THE DESIGNER OF ANY DIMENSIONAL ERRORS, OMISSIONS OR DISCREPANCIES BEFORE BEGINNING OR FABRICATING ANY WORK.
2. APPLICATIONS FOR WHICH NO PERMIT IS ISSUED WITHIN 180 DAYS FOLLOWING THE DATE OF APPLICATION SHALL AUTOMATICALLY EXPIRE.(R105.3.2 CRC)
3. EVERY PERMIT ISSUED SHALL BECOME INVALID UNLESS WORK AUTHORIZED IS COMMENCED WITHIN 180 DAYS OR IF THE WORK AUTHORIZED IS SUSPENDED OR ABANDON FOR A PERIOD OF 180 DAYS. A SUCCESSFUL INSPECTION MUST BE OBTAINED WITHIN 180 DAYS.
4. ALL CONSTRUCTION SHALL COMPLY WITH THE 2022 EDITIONS OF THE CALIFORNIA BUILDING CODE, CALIFORNIA ELECTRICAL CODE, CALIFORNIA MECHANICAL CODE, CALIFORNIA PLUMBING CODE, CALIFORNIA FIRE CODE AND 2016 CALIFORNIA ENERGY CODE AND CALGREEN
5. BUILDING SHALL HAVE ADDRESS NUMBERS PLACED IN A POSITION THAT IS PLAINLY LEGIBLE AND VISIBLE FROM THE STREET OR ROAD FRONTING THE PROPERTY. NUMBERS SHALL CONTRAST WITH BACKGROUND, BE ARABIC OR ALPHABETICAL LETTERS AND BE A MINIMUM OF 4" HIGH WITH A MINIMUM STROKE OF ½". (R319.1 CRC)
6. EXCEPT WHERE MORE STRINGENT REQUIREMENTS ARE NOTED OR SHOWN ON THE PLANS, WORKMANSHIP & MATERIALS SHALL CONFORM TO THE 2019 CBC
7. THE PLANS SHALL BE REVIEWED FOR DIMENSIONAL & EXISTING SITE CONFORMANCE WITH THE PLANS BY THE CONTRACTOR PRIOR TO THE START OF CONSTRUCTION. THE DESIGNER & ENGINEER SHALL BE NOTIFIED OF ANY DISCREPANCIES.
8. WORKING DIMENSIONS SHALL NOT BE SCALED FROM DRAWINGS.
9. ITEMS IDENTIFIED BY TRADE NAMES MAY BE SUBSTITUTED BY APPROVED EQUALS.
10. NOTES & DETAILS ON DRAWINGS SHALL PRECEDE THESE GENERAL NOTES
11. PROVIDE ANY SHORING & OR BRACING PRIOR TO REMOVING EXISTING WALLS, BEAMS, OR SUPPORTS FOR CONSTRUCTION. REMOVE SHORING ONLY WHEN NEW SUPPORTS ARE IN PLACE AND SECURED.
12. THE CONTRACTOR SHALL LOCATE ALL EXISTING UTILITIES WHETHER OR NOT SHOWN ON DRAWINGS AND PROTECT THEM FROM DAMAGE
13. DO NOT CUT POST TENSION SLABS. CONTRACTOR TO DETERMINE EXISTING CONDITIONS PRIOR TO START OF CONSTRUCTION.
14. THE CONTRACTOR SHALL VERIFY ALL EXISTING CONDITIONS FOR FOOTINGS, BEAMS AND JOISTS, SIZES LOCATIONS ETC. AND SHALL NOTIFY THE ARCHITECT & ENGINEER OF ANY DISCREPANCIES.

PROJECT INFO

PROJECT DESCRIPTION

REMOVE ALL EXISTING TRELLISES, IN THEIR ENTIRETY, DETACH ALL STRUCTURAL AND HARDWARE CONNECTIONS TO AVOID DAMAGE TO SURROUNDING FINISHES. PATCH AND REPAIR ALL AFFECTED SURFACES TO MATCH ADJACENT MATERIALS, TEXTURE, AND COLOR - PER GENERAL CONTRACTOR

PLANNING AND ZONING INFORMATION

PARCEL AREA:	6.687 ACRES (290,980) SQ FT
PARCEL DIMENSIONS:	IRREGULAR
GENERAL PLAN:	N/A
ZONING DISTRICT:	5.3C
EXISTING USE:	MULTI-FAMILY APARTMENTS
PROPOSED USE:	MULTI-FAMILY APARTMENTS

BUILDING FOOTPRINT:

BUILDING A AND PARKING STR. A:	74,400 SQ FT
BUILDING B AND PARKING STR. B:	83,641 SQ FT
TOTAL:	158,041 SQ FT

BUILDING COVERAGE (BLDG. FOOTPRINT/SITE ACREAGE)

MAX. ALLOWABLE PER 5.1	65%

BUILDING HEIGHT:

MAX. ALLOWABLE PER 5.3 C	FAA HEIGHT LIMITS
MAIN BUILDING:	50'-0" (MAX.)

RELEVANT CODES

2022 CALIFORNIA BUILDING CODE	2022 CALIFORNIA GREEN BUILDING CODE
2022 CALIFORNIA MECHANICAL CODE	2022 CALIFORNIA FIRE CODE
2022 CALIFORNIA ELECTRICAL CODE	2022 CALIFORNIA ENERGY CODE
2022 CALIFORNIA PLUMBING CODE	CITY OF IRVINE MUNICIPAL CODE

Silva Design Construction Inc.

TITLE SHEET

Apartments Structure
2100 Scholarship
Irvine, CA 92614

DRAWN BY SSH

CHECKED BY SSH

SSH

REVISIONS

NUMBER	DATE	BY
1	08/05/2025	PCC #1
2		

LICENSED ARCHITECT
SHEENA HABIBIAN
C-38787
05-31-2025
RENEWAL DATE
STATE OF CALIFORNIA

DATE ISSUED 08-05-25

DATE PRINTED

PROJECT REF. NUMBER

A0.1

SHEET NUMBER

ABBREVIATIONS

L	ANGLE
@	AT
℄ OR C.L.	CENTERLINE
Ø	DIAMETER
#	NUMBER / POUND
A.B.	ANCHOR BOLT
A/C	AIR CONDITIONING
AC.	ACOUSTICAL
A.C.T.	ACOUSTICAL TILE
A.D.	AREA DRAIN
ADJ.	ADJACENT
A.F.F.	ABOVE FINISH FLOOR
AGGR.	AGGREGATE
AL.	ALUMINUM
AMP.	AMPERES
ANCH.	ANCHOR
A.P.	ACCESS PANEL
APPROX.	APPROXIMATE
ARCH.	ARCHITECTURAL
ASB.	ASBESTOS
ASPH.	ASPHALT
BD.	BOARD
BITUM.	BITUMINOUS
BLDG.	BUILDING
BLK.	BLOCK
BLKG.	BLOCKING
BM.	BEAM
BOT.	BOTTOM
BRKT.	BRACKET
BSMT.	BASEMENT
B.T.U.	BRITISH THERMAL UNITS
CAB.	CABINET
C.B.	CATCH BASIN
CEM.	CEMENT
CER.	CERAMIC
C.G.	CORNER GUARD
C.I.	CAST IRON
C.I.P.	CAST-IN-PLACE
C.J.	CEILING JOIST
C.L.	CENTER LINE
CLG.	CEILING
CLKG.	CAULKING
CLR.	CLEAR
C.M.U.	CONCRETE MASONRY UNIT
C.O.	CASED OPENING / CLEAN OUT
COL.	COLUMN
CONC.	CONCRETE
CONN.	CONNECTION
CONSTR.	CONSTRUCTION
CONT.	CONTINUOUS
CORR.	CORRIDOR
CNTR.	COUNTER
CTR.	CENTER
CTSK.	COUNTERSUNK
DBL.	DOUBLE
DEPT.	DEPARTMENT
DET.	DETAIL
D.F.	DRINKING FOUNTAIN
DIA.	DIAMETER
DIM.	DIMENSION
DISP.	DISPENSER
DN.	DOWN
D.O.	DOOR OPENING
D.P.	DAMPPROOFING
DR.	DOOR
DRN.	DRAIN
DS.	DOWNSPOUT
D.S.G.	DOUBLE STRENGTH GLASS
D.S.P.	DRY STANDPIPE
DWG.	DRAWING
DWR.	DRAWER
(E)	EXISTING
E.	EAST
EA.	EACH
E.D.F.	ELECTRICAL DRINKING FOUNTAIN
E.J.	EXPANSION JOINT
EL.	ELEVATION
ELEC.	ELECTRICAL
ELEV.	ELEVATOR / ELEVATION
EMER.	EMERGENCY
ENCL.	ENCLOSURE
E.P.	ELECTRICAL PANELBOARD
E.R.	EXISTING RELOCATED
EPO	EMERGENCY POWER OFF SWITCH
EQ.	EQUAL
EQPT.	EQUIPMENT
E.W.C.	ELECTRIC WATER COOLER
EXP.	EXPANSION
EXPO.	EXPOSED
EXIST.	EXISTING
EXT.	EXTERIOR
F.A.	FIRE ALARM
F.D.	FLOOR DRAIN
FDN.	FOUNDATION
F.E.	FIRE EXTINGUISHER
F.E.C.	FIRE EXTINGUISHER CABINET
F.F.	FINISH FLOOR
F.G.	FINISH GRADE
F.H.	FIRE HYDRANT
F.H.C.	FIRE HOSE CABINET
F.V.C.	FIRE VALVE CABINET
FIN.	FINISH
FL.	FLOOR / FLOW LINE
FLASH.	FLASHING
FLUOR.	FLUORESCENT
F.O.B.	FACE OF BRICK
F.O.C.	FACE OF CONCRETE
F.O.F.	FACE OF FINISH
F.O.G.	FACE OF GLASS
F.O.M.	FACE OF MASONRY
F.O.S.	FACE OF STUD
FPRF.	FIREPROOF(ING)
FR.	FRAME
F.S.	FULL SIZE / FLOOR SINK
FT.	FOOT OR FEET
FTG.	FOOTING
FURR.	FURRING
FUT.	FUTURE
FV	FIELD VERIFY
G.	GAS LINE (FUEL GAS)
GA.	GAUGE
GALV.	GALVANIZED
G.B.	GRAB BAR
G.C.	GENERAL CONTRACTOR
GL	GLASS
GND.	GROUND
G.P.H.	GALLONS PER HOUR
G.P.M.	GALLONS PER MINUTE
GR.	GRADE
GYP.	GYPSUM
GWB.	GYPSUM WALLBOARD
H.B.	HOSE BIB
H.C.	HOLLOW CORE
H.D.	HEAD / HEAVY DUTY
HDW.	HARDWARE
HDWD.	HARDWOOD
HGT.	HEIGHT
H.M.	HOLLOW METAL
HDRL.	HANDRAIL
HORIZ.	HORIZONTAL
H.P.T.	HIGH POINT
HR.	HOUR
HT.	HEIGHT
H.V.A.C.	HEATING, VENTING AND AIR CONDITIONING
HW.	HOT WATER
INC.	INCORPORATED
I.D.	INSIDE DIAMETER / DIMENSION
IN.	INCH
INCL.	INCLUDE(D)
INSUL.	INSULATION
INT.	INTERIOR
INV.	INVERT
JAN.	JANITOR
JST.	JOIST
KIT.	KITCHEN
K.P.	KICK-PLATE
KO.	KNOCKOUT

L.	LENGTH
LAB.	LABORATORY
LAM.	LAMINATE
LAV.	LAVATORY
LBS	POUNDS
L.F.	LINEAR FEET
LPT.	LOW POINT
LT.	LIGHT
MATL.	MATERIAL
MAX.	MAXIMUM
M.C.	MEDICINE CABINET
MECH.	MECHANICAL
MEMB.	MEMBRANE
MFG.	MANUFACTURER
MH.	MAN HOLE
MIN.	MINIMUM
MIR.	MIRROR
MISC.	MISCELLANEOUS
MLDG.	MOULDING
M.O.	MASONRY OPENING
M.S.	MOTION SENSOR
MTD.	MOUNTED
MTL.	METAL
MUL.	MULLION
(N)	NEW
N.	NORTH
N.G.	NATURAL GRADE
N.I.C.	NOT IN CONTRACT
NO. / #	NUMBER
NOM.	NOMINAL
N.T.S.	NOT TO SCALE
OA.	OVERALL
O.C.	ON CENTER
O.D.	OUTSIDE DIAMETER
OFF.	OFFICE
O.H.	OPPOSITE HAND
OPNG.	OPENING
OPP.	OPPOSITE
OVHD.	OVERHEAD
PART'L	PARTIAL
PAV.	PAVING
P.C.	PRECAST CONCRETE
PROJ.	PROJECT
PL.	PLATE
P.LAM.	PLASTIC LAMINATE
PLAS.	PLASTER
PLYWD.	PLYWOOD
PLBG.	PLUMBING
PR.	PAIR
POL.	POLISHED
PRCST.	PRECAST
PT.	POINT
Q.T.	QUARRY TILE
R.	RISER
RAD.	RADIUS
R.B.	RESILIENT BASE
REG.	REGULAR
R.D.	ROOF DRAIN
REF.	REFERENCE
REFR.	REFRIGERATOR
REINF.	REINFORCED
REQ.	REQUIRED
RESIL.	RESILIENT
REV.	REVISION
RFL.	REFLECTED
RGTR.	REGISTER
RM.	ROOM
R.O.	ROUGH OPENING
RWD.	REDWOOD
RWL.	RAINWATER LEADER
S.	SOUTH
S4S	SMOOTH 4 SIDES
SAN.	SANITARY
S.C.	SOLID CORE
SCHED.	SCHEDULE
S.D.	SMOKE DETECTOR
SECT.	SECTION
SF	SQUARE FOOT
SHR.	SHOWER
SHT.	SHEET
SHTG.	SHEATHING
SIM.	SIMILAR
S.M.S.	STEEL MACHINE SCREWS
S.O.V.	SHUT OFF VALVE
SPEC.	SPECIFICATION
SPKR.	SPEAKER
SQ.	SQUARE
S.SK.	SERVICE SINK
STA.	STATION
STD.	STANDARD
S.S.	STAINLESS STEEL
STL.	STEEL
STOR.	STORAGE
STR.	STRUCTURAL
SUBCAT.	SUBCATEGORY
SUPP.	SUPPORT
SUSP.	SUSPENDED
SYM.	SYMMETRICAL
T.	THERMOSTAT
T.I.	TENANT IMPROVEMENT
T.B.	TOWEL BAR
T.C.	TOP OF CONCRETE
T.D.	TOP OF DECK
TEL.	TELEPHONE
TEM.	TEMPERED
TER.	TERAZZO
T&G	TONGUE AND GROOVE
THK.	THICK
T.O.	TOP OF
T.O.P.	TOP OF PAVEMENT / TOP OF PARAPET
T.P.D.	TOILET PAPER DISPENSER
TRAN.	TRANSFORMER
TRD	TREAD
T.S.	TOP OF SLAB / TOP OF STEEL
T.S.S.	TOP OF STRUCTURAL SLAB
T.V.	TELEVISION
T.W.	TOP OF WALL
TYP.	TYPICAL
UNF.	UNFINISHED
U.N.O.	UNLESS NOTED OTHERWISE
UR.	URINAL
U.T.R.	UP THROUGH ROOF
V	VENT / VOLT
VCP	VITRIFIED CLAY PIPE
V.C.T.	VINYL COMPOSITION TILE
VERT.	VERTICAL
VEST.	VESTIBULE
V.G.D.F.	VERTICAL GRAIN DOUGLAS FIR
V.T.R.	VENT THROUGH ROOF
V.G.	VERTICAL GRAIN
W.	WEST
W/	WITH
W.C.	WATER CLOSET
WD	WOOD
W.I.C.	WOODWORK INSTITUTE OF CA
W/O	WITHOUT
WP.	WATERPROOF
WSCT.	WAINSCOT
WT.	WEIGHT

FILL LEGEND

CONCRETE	METAL
FINISH GRADE	NATURAL GRADE
ACOUSTIC TILE	BRICK VENEER OR MASONARY
CERAMIC TILE (LARGE SCALE)	GRAVEL
GYPSUM WALLBOARD	INSULATION: BATT
INSULATION, RIGID, SEMI-RIGID	MASONARY
PLASTER	PLASTER W/ LATH (LARGE SCALE)
PLYWOOD	SAND
STONE	WOOD, FINISH
WOOD, CONTINUOUS	WOOD, BLOCKING

SYMBOLS LEGEND

X — DOOR TAG, SEE SCHEDULE

J X — WINDOW TAG, SEE SCHEDULE; SPECIAL ATTRIBUTE (TEMPERED / EGRESS)

X TYP — ARCHITECTURAL KEYNOTE TAG; TYPICAL

X # — EQUIPMENT / FIXTURE TAG, SEE SCHEDULE; # OF UNITS

REVISION TAG

X-X — GENERAL FINISH TAG

WT X — WALL FINISH TAG

FT X — FLOOR FINISH TAG

+X–X" — CEILING HEIGHT TAG

ELEVATION DATUM / POINT OF CONNECTION

X / AX.X — DETAIL #; SHEET # — DETAIL REFERENCE

X / AX.X — ELEVATION #; SHEET # — ELEVATION MARKER

A B C D X / AX.X — ELEVATION #; SHEET # — MULTIPLE ELEVATION MARKER

X / AX.X — SECTION MARKER

+X" — SLAB ELEVATION CHANGE

X/AX.X — DRAWING #; SHEET #; MATCH LINE (SHADED PORTION IS SIDE CONSIDERED)

BEST MANAGEMENT PRACTICES

1: EVERY EFFORT SHOULD BE MADE TO ELIMINATE THE DISCHARGE OF NON-STORMWATER FROM THE PROJECT SITE AT ALL TIMES.

2: ERODED SEDIMENTS AND OTHER POLLUTANTS MUST BE RETAINED ON-SITE AND MAY NOT BE TRANSPORTED FROM THE SITE VIA SHEET FLOW, SWALES, AREA DRAINS, NATURAL DRAINAGE COURSES OR WIND.

3: STOCKPILES OF EARTH AND OTHER CONSTRUCTION RELATED MATERIALS MUST BE PROTECTED FROM BEING TRANSPORTED FROM THE SITE BY THE FORCES OF WIND OR WATER.

4: FUELS, OILS, SOLVENTS, AND OTHER TOXIC MATERIALS MUST BE STORED IN ACCORDANCE WITH THEIR LISTING AND ARE NOT TO CONTAMINATE THE SOIL AND SURFACE WATERS. ALL APPROVED STORAGE CONTAINERS ARE TO BE PROTECTED FROM THE WEATHER. SPILLS MUST BE CLEANED UP IMMEDIATELY AND DISPOSED OF IN A PROPER MANNER. SPILLS MAY NOT BE WASHED INTO THE DRAINAGE SYSTEM.

5: EXCESS OR WASTE CONCRETE MAY NOT BE WASHED INTO THE PUBLIC WAY OR ANY OTHER DRAINAGE SYSTEM. PROVISIONS SHALL BE MADE TO RETAIN CONCRETE WASTES ON-SITE UNTIL THEY CAN BE DISPOSED OF AS SOLID WASTE.

6: TRASH AND CONSTRUCTION RELATED SOIL WASTES MUST BE DEPOSITED INTO A COVERED RECEPTACLE TO PREVENT CONTAMINATION OF RAINWATER AND DISPERSAL BY WIND.

7: SEDIMENTS AND OTHER MATERIALS MAY NOT BE TRACKED FROM THE SITE BY VEHICLE TRAFFIC. THE CONSTRUCTION ENTRANCE ROADWAYS MUST BE STABILIZED SO AS TO INHIBIT SEDIMENTS FROM BEING DEPOSITED INTO THE PUBLIC WAY. ACCIDENTAL DEPOSITIONS MUST BE SWEPT UP IMMEDIATELY AND MAY NOT BE WASHED DOWN BY RAIN OR OTHER MEANS.

8: ANY SLOPES WITH DISTURBED SOILS OR DENUDED OF VEGETATION MUST BE STABILIZED SO AS TO INHIBIT EROSION BY WIND AND WATER.

SPECIFICATIONS

DIVISION 01 - GENERAL REQUIREMENTS

1.1: WORK PERFORMED SHALL COMPLY WITH THESE NOTES (UNLESS OTHERWISE NOTED ON PLANS), CALIFORNIA BUILDING CODE - LATEST EDITION ADOPTED BY THE GOVERNING AGENCY, ALL APPLICABLE LOCAL AND STATE CODES, ORDINANCES AND REGULATIONS.

1.2: THE CONTRACTOR SHALL VISIT THE SITE, EXAMINE THE EXISTING STRUCTURES, AND NOTE ALL CONDITIONS AS TO THE CHARACTER AND EXTENT OF WORK INVOLVED, PRIOR TO SUBMITTING THE BID.

1.3: BY SUBMITTING A BID, THE BIDDER AGREES AND WARRANTS THAT HE HAS EXAMINED THE DRAWINGS AND FOUND THAT THEY ARE ADEQUATE FOR PROPER COMPLETION OF THE PROJECT.

1.4: THE CONTRACTOR SHALL PROCURE ALL NECESSARY PERMITS OR CERTIFICATES REQUIRED TO COMPLETE THE WORK SPECIFIED. THE CONTRACTOR SHALL MAKE ANY AND ALL REQUIRED NOTIFICATIONS AND COMPLY WITH ALL APPLICABLE FEDERAL, STATE, AND LOCAL ORDINANCES.

1.5: ALL TRADES SHALL FURNISH ALL LABOR, EQUIPMENT, MATERIALS END PERFORM ALL WORK NECESSARY, INDICATED, REASONABLY INFERRED, OR REQUIRED BY ANY CODE WITH JURISDICTION TO COMPLETE THEIR SCOPE OF WORK FOR A COMPLETE AND PROPERLY FINISHED JOB. COMPLETED PORTIONS OF THE WORK.

1.6: IT IS DIRECTLY STIPULATED THAT THE CONTRACTOR SHALL REPAIR AND MAKE GOOD ANY DAMAGE TO ADJOINING PROPERTIES OR IMPROVEMENTS CAUSED BY HIS OPERATIONS.

1.7: THE CONTRACTOR SHALL COORDINATE THE WORK OF ALL TRADES, CORRELATING THE ARCHITECTURAL DRAWINGS WITH ANY AND ALL CIVIL, STRUCTURAL, SOILS, MECHANICAL, SOLAR, ELECTRICAL, PLUMBING, LANDSCAPE, OR INTERIOR DESIGN DOCUMENTS OR DRAWINGS.

1.8: ON SITE VERIFICATION OF ALL DIMENSIONS AND CONDITIONS SHALL BE THE RESPONSIBILITY OF THE CONTRACTOR (SUBCONTRACTOR). DIMENSIONS TAKE PRECEDENCE, DO NOT SCALE DRAWINGS. SUCH VERIFICATION SHALL BE MADE BEFORE' ORDERING MATERIALS PREFABRICATED ITEMS AND COMMENCING ANY PORTION OF THE WORK.

1.9: ALL FRAMING CONDITIONS, NOT SPECIFICALLY COVERED IN THE DRAWINGS SHALL BE IN CONFORMANCE WITH THE GENERAL CONSTRUCTION REQUIREMENTS AND CONVENTIONAL CONSTRUCTION PROVISIONS OF THE RELEVANT CODES. ANY MATERIALS SUBSTITUTION SHALL BE PERMITTED ONLY UPON THE CONTRACTOR OR SUPPLIER RECEIVING A WRITTEN CONSENT FROM THE ARCHITECT.

1.10: ALL MATERIAL REMOVED UNDER THIS CONTRACT, WHICH IS NOT TO BE SALVAGED OR REUSED OR TURNED OVER TO THE OWNER, SHALL BECOME THE PROPERTY OF THE CONTRACTOR AND SHALL BE PROMPTLY REMOVED FROM THE SITE.

1.11: CONTRACTOR SHALL VERIFY ALL DIMENSIONS IN THE FIELD AND NOTIFY THE ARCHITECT IMMEDIATELY, IN WRITING, OF ANY DISCREPANCIES.

END OF SECTION

DIVISION 02 - EXISTING CONDITIONS

2.2: THE CONTRACTOR SHALL CONFIRM ANY EXISTING ITEMS TO REMAIN WITH THE ARCHITECT AND OWNER PRIOR TO THE START OF CONSTRUCTION.

END OF SECTION

DIVISION 03 - CONCRETE

3.1: ALL PIPES, DUCTS AND CONDUITS WITHIN THE SPHERE OF INFLUENCE OF THE FOOTING (THE PRESSURE ZONE EXTENDING BELOW THE FOOTING BASED ON A 2 HORIZONTAL TO 1 VERTICAL SLOPE) SHALL BE SLEEVED THROUGH CONCRETE AND CAST–IN–PLACE AT THE TIME OF THE FOUNDATION POUR.

3.2: ALL SLEEVED PIPES AND CONDUITS VERTICAL AND HORIZONTAL SHALL BE WRAPPED IN PROTECTIVE COMPRESSIVE MATERIAL.

3.3: ALL FOUNDATIONS SHALL PENETRATE FILL AND BE PUT INTO FIRM NATURAL SOIL OR APPROVED COMPACTED SOIL, IN ACCORDANCE WITH THE PROJECT SOILS ENGINEER'S REQUIREMENTS.

3.4: ALL CONCRETE REINFORCEMENT SHALL BE INSPECTED BY THE BUILDING DEPARTMENT PRIOR TO POURING OF ANY CONCRETE.

3.5: DO NOT PLACE CONCRETE UNTIL ALL REINFORCING STEEL, CONDUIT, OUTLET BOXES, ANCHORS, HANGERS, SLEEVES, BOLTS AND OTHER EMBEDDED MATERIALS ARE SECURELY AND PROPERLY FASTENED IN THEIR PROPER PLACES IN POSITION, AND UNTIL REINFORCING STEEL AND FORMS HAVE BEEN INSPECTED AND APPROVED.

3.6: CONCRETE PLACEMENT SHALL COMPLY WITH ACI 304, PLACING CONCRETE IN A CONTINUOUS OPERATION WITH PLANNED JOINTS OR SECTIONS. PROTECT CONCRETE FROM PHYSICAL DAMAGE OR REDUCED STRENGTH DUE TO WEATHER EXTREMES. WHEN PLACING CONCRETE DURING HOT WEATHER, COMPLY WITH ACI 305.

END OF SECTION

DIVISION 06 - WOOD

6.1: IN ADDITION TO ANY STRUCTURAL GRADE REQUIREMENTS, ALL EXPOSED WOOD BEAMS AND POSTS SHALL BE SELECTED FOR BEST APPEARANCE GRADE WITH A MINIMUM OF KNOTS AND CHECKS.

6.2: ALTERING STRUCTURAL MEMBERS: NO STRUCTURAL MEMBERS SHALL BE OMITTED, NOTCHED, CUT, BLOCKED, OR RELOCATED WITHOUT PRIOR APPROVAL OF THE STRUCTURAL ENGINEER.

6.3: IT SHALL BE THE RESPONSIBILITY OF THE CONTRACTOR TO PROVIDE TEMPORARY BRACES, SHORES AND GUYS, WHEREVER NECESSARY TO SUPPORT ALL LOADS TO WHICH THE STRUCTURE MAY BE SUBJECTED DURING CONSTRUCTION, INCLUDING ERECTION EQUIPMENT AND OPERATION. THIS TEMPORARY SUPPORT SYSTEM SHALL HOLD ALL ELEMENTS AND MEMBERS IN THEIR FINAL POSITION UNTIL TOTALLY AND FINALLY CONNECTED TO THE PERMANENT BRACING ELEMENTS.

6.4: THE CONTRACTOR SHALL COORDINATE FRAMING WITH PROPOSED LOCATIONS OF ELECTRICAL, MECHANICAL AND PLUMBING WORK SO AS TO AVOID CHANGES IN FRAMING WHICH MIGHT CONFLICT WITH PROPOSED EQUIPMENT, FIXTURE OR DIFFUSER LOCATIONS.

6.5: PROVIDE FRAMED OPENINGS FOR MEDICINE CABINETS DURING ROUGH FRAMING, CONFIRMING SIZE, LOCATION AND HEIGHTS OF OPENINGS WITH THE OWNER PRIOR TO CONSTRUCTION.

6.6: PROVIDE BACKING FOR CABINETS, EQUIPMENT AND ANY TRIM THAT REQUIRES SECURE ATTACHMENT. ALL ABOVE TO BE COMPLETED DURING ROUGH FRAMING.

6.7: PROVIDE SOLID BLOCKING IN WALLS BEHIND ALL HANDRAIL SUPPORTS, GUARDRAIL SUPPORTS, TOILET PAPER DISPENSERS AND TOWEL RODS. ALL ABOVE TO BE COMPLETED DURING ROUGH FRAMING.

6.8: ALL LUMBER SHALL BE GRADE MARKED AND CONFORM WITH THE STANDARD GRADING AND DRESSING RULES (NO.16) OF THE WEST COAST LUMBER INSPECTION BUREAU.

6.9: ALL EXPOSED WOOD BEAMS, DECKING OR OTHER MEMBERS INSTALLED PRIOR TO ENCLOSING THE BUILDING ENVELOPE AND COMPLETING ROOFING MEMBRANE SHALL BE PROTECTED DURING CONSTRUCTION AGAINST MOISTURE, STAINING AND OTHER DAMAGE BY PROTECTING WITH WEATHERPROOF PLASTIC WRAPPERS AND ADDITIONAL PROTECTIVE MEASURES AS MAY BE REQUIRED. DAMAGED LUMBER MAY BE SUBJECT TO REPLACEMENT.

6.10: ALL PLYWOOD SUBFLOORING SHALL BE GLUED.

6.11: PROVIDE PROTECTION OF WOOD AND WOOD-BASED PRODUCTS AGAINST DECAY IN ACCORDANCE WITH CRC SECTION R317 / CBC SECTION 2304.12.

6.12: PROVIDE PROTECTION AGAINST SUBTERRANEAN TERMITES IN ACCORDANCE WITH CRC SECTION R318 / CBC SECTION 2304.12.

END OF SECTION

DIVISION 07 - THERMAL AND MOISTURE PROTECTION

7.1: ALL FLASHINGS SHALL BE INSTALLED SO THAT THEY ARE WATERTIGHT. NOTIFY THE ARCHITECT OF ANY POINT WHERE WATER OR MOISTURE MAY PENETRATE FOR ADDITIONAL WATER PROTECTIVE MEASURES.

7.2: METAL FLASHING: ZINC-COATED SHEET STEEL PER ASTM A 526 OR HOT DIP GALVANIZED TO COMPLY WITH ASTM A 525 (UNLESS NOTED OTHERWISE). 1.25 COMMERCIAL CLASS, MILL PHOSPHATISED EXCEPT WHEN EXPOSED IN THE FINAL WORK.

7.3: ALL SHEET METAL FLASHING SHALL BE 26 GAUGE GALVANIZED IRON IF BACKED, AND 22 GAUGE IF NOT BACKED, UNLESS OTHERWISE NOTED.

7.4: PARAPET COPING CAPS SHALL BE INSTALLED SO AS TO BE CONTINUOUS AND LEVEL, WITH SOLDERED SEAMS, AND SHALL BE INSTALLED TO SLOPE SLIGHTLY TOWARDS THE ROOF SIDE. UNLESS SPECIFIED, SHEET METAL GAUGE SHALL BE SUFFICIENT TO WITHSTAND DENTING OR BENDING.

7.5: ALL SCUPPERS, GUTTERS, DOWNSPOUTS, LEADER BOXES OR OTHER SHEET METAL WORK SHALL BE PROPERLY FLASHED AND SHALL HAVE SOLDERED OR SEALED WATERPROOF JOINTS. ALL BENDS, SEAMS, SPLICES OR OTHER CONNECTIONS SHALL BE STRAIGHT, SMOOTH AND CONTINUOUS WITHOUT DIMPLING OR DENTS. UNLESS SPECIFIED, SHEET METAL GAUGE SHALL BE SUFFICIENT TO WITHSTAND DENTING OR BENDING.

7.6: UNLESS OTHERWISE NOTED, ALL CONCEALED DRAIN DOWNSPOUTS SHALL BE PVC SCHEDULE 40, MINIMUM 4" DIAMETER OR LARGER SUFFICIENT TO HANDLE DRAINED AREAS. ALL CONNECTIONS SHALL BE WATERTIGHT.

7.7: PROVIDE FLASHING OF 26 GAUGE GALVANIZED SHEET METAL AT ALL VERTICAL INTERSECTIONS OF EXTERIOR WALLS TO DECKS, CURBS AND ROOF TO PARAPETS OR ROOF CHANGES IN HEIGHT (COUNTERFLASH) WITH MINIMUM 8" VERTICAL AND 8" HORIZONTAL LEGS.

7.8: CENTER OF ALL FLASHINGS FOR VENT PIPES, HEATER PIPES, ELECTRICAL SERVICE CONNECTIONS, ETC. SHALL NOT BE LESS THAN 12" FROM THE CENTER OF ANY ROOF VALLEY.

7.9: PROVIDE APPROVED ROOF JACKS AT ALL ROOF PENETRATIONS.

7.10: ALL INSULATION MATERIALS SHALL BE CERTIFIED BY THE MANUFACTURER AS COMPLYING WITH THE CALIFORNIA QUALITY STANDARDS FOR INSULATING MATERIALS. A CERTIFICATE OF COMPLIANCE WITH THE ABOVE SHALL BE SIGNED BY THE INSULATION CONTRACTOR, CERTIFYING COMPLIANCE WITH THIS SPECIFICATION. THE CERTIFICATE SHALL BE DELIVERED TO THE OWNER.

7.11: THE CONTRACTOR SHALL FURNISH AND INSTALL INSULATION COMPLYING WITH THE MINIMUM R-VALUES STIPULATED IN THE CALCERTS "CERTIFICATE OF COMPLIANCE -- RESIDENTIAL PERFORMANCE COMPLIANCE METHOD."

7.12: OPERABLE WINDOWS AND DOORS TO THE EXTERIOR OR UNCONDITIONED SPACES SHALL BE FULLY SEATHER-STRIPED, GASKETED OR OTHERWISE TREATED TO LIMIT AIR INFILTRATION.

7.13: ALL FAN SYSTEMS EXHAUSTING AIR FROM THE BUILDING SHALL BE PROVIDED WITH BACK DRAFT DAMPERS.

7.14: CAULK AROUND ALL PLUMBING, ELECTRICAL AND OTHER PENETRATIONS INTO THE BUILDING ENVELOPE. SEAL ALL BUILDING ENVELOPE PENETRATIONS.

END OF SECTION

SECTION 07 17 00 - BENTONITE WATERPROOFING

PART 1 - GENERAL

1.1 SUMMARY

A. SECTION INCLUDES:

1. BENTONITE WATERPROOFING
2. MOLDED SHEET DRAINAGE PANELS

1.3 REFERENCES

A. REFERENCES, GENERAL: VERSIONS OF THE FOLLOWING STANDARDS CURRENT AS OF THE DATE OF ISSUE OF THE PROJECT APPLY TO THE WORK OF THIS SECTION.

B. ASTM INTERNATIONAL (ASTM):

1. ASTM C920 - STANDARD SPECIFICATION FOR ELASTOMERIC JOINT SEALANTS
2. ASTM D412 - STANDARD TEST METHODS FOR VULCANIZED RUBBER AND THERMOPLASTIC ELASTOMERS - TENSION
3. ASTM D1621 - STANDARD TEST METHOD FOR COMPRESSIVE PROPERTIES OF RIGID CELLULAR PLASTICS
4. ASTM D4397 - STANDARD SPECIFICATION FOR POLYETHYLENE SHEETING FOR CONSTRUCTION, INDUSTRIAL, AND AGRICULTURAL APPLICATIONS
5. ASTM D4491 - STANDARD TEST METHODS FOR WATER PERMEABILITY OF GEOTEXTILES BY PERMITTIVITY
6. ASTM D4716 - STANDARD TEST METHOD FOR DETERMINING THE (IN-PLANE) FLOW RATE PER UNIT WIDTH AND HYDRAULIC TRANSMISSIVITY OF A GEOSYNTHETIC USING A CONSTANT HEAD
7. ASTM D4833 - STANDARD TEST METHOD FOR INDEX PUNCTURE RESISTANCE OF GEOMEMBRANES AND RELATED PRODUCTS
8. ASTM D5385 - STANDARD TEST METHOD FOR HYDROSTATIC PRESSURE RESISTANCE OF WATERPROOFING MEMBRANES
9. ASTM E96/E 96M - STANDARD TEST METHODS FOR WATER VAPOR TRANSMISSION OF MATERIALS
10. ASTM E154 - STANDARD TEST METHODS FOR WATER VAPOR RETARDERS USED IN CONTACT WITH EARTH UNDER CONCRETE SLABS, ON WALLS, OR AS GROUND COVER

C. U. S. ENVIRONMENTAL PROTECTION AGENCY (EPA):

1.4 ADMINISTRATIVE REQUIREMENTS

A. PREINSTALLATION CONFERENCE: CONDUCT CONFERENCE AT PROJECT SITE.

1. REVIEW REQUIREMENTS FOR WATERPROOFING PRODUCTS AND INSTALLATION, INCLUDING SURFACE PREPARATION, SUBSTRATE CONDITIONS, PROJECT AND MANUFACTURER'S DETAILS, INSTALLATION PROCEDURES, MOCKUPS, TESTING AND INSPECTION REQUIREMENTS, PROTECTION AND REPAIRS, AND COORDINATION AND SEQUENCING OF WATERPROOFING INSTALLATION WITH WORK OF OTHER SECTIONS.

1.5 ACTION SUBMITTALS

A. PRODUCT DATA: FOR EACH TYPE OF WATERPROOFING PRODUCT SPECIFIED, INCLUDING:

1. TECHNICAL DATA INDICATING COMPLIANCE WITH REQUIREMENTS.
2. SUBSTRATE PREPARATION INSTRUCTIONS AND RECOMMENDATIONS.

B. SHOP DRAWINGS: SHOW LOCATIONS FOR WATERPROOFING SYSTEM COMPONENTS. SHOW DETAILS FOR EACH TYPE OF SUBSTRATE, JOINTS, CORNERS, AND EDGE CONDITIONS, INCLUDING FLASHINGS, COUNTERFLASHINGS, PENETRATIONS, TRANSITIONS, AND TERMINATIONS.

1.6 INFORMATIONAL SUBMITTALS

A. MATERIAL CERTIFICATES: FOR EACH TYPE OF BENTONITE WATERPROOFING, FROM MANUFACTURER.

B. QUALIFICATION DATA: FOR INSTALLER, MANUFACTURER, AND WATERPROOFING INSPECTOR.

1. CERTIFICATION OF MANUFACTURER'S APPROVAL OF INSTALLER.

C. PRODUCT TEST REPORTS: TEST DATA FOR WATERPROOFING PRODUCTS AND WATERPROOFING SYSTEM, BY QUALIFIED TESTING AGENCY, INDICATING PROPOSED WATERPROOFING MEETS PERFORMANCE REQUIREMENTS, WHEN REQUESTED BY ARCHITECT.

D. WARRANTY: SAMPLE OF UNEXECUTED MANUFACTURER AND INSTALLER SPECIAL WARRANTIES.

E. FIELD QUALITY CONTROL REPORTS.

1.7 QUALITY ASSURANCE

A. INSTALLER QUALIFICATIONS: A MANUFACTURER–APPROVED FIRM WITH MINIMUM THREE YEARS' EXPERIENCE IN INSTALLATION OF SPECIFIED PRODUCTS IN SUCCESSFUL USE ON SIMILAR PROJECTS, EMPLOYING WORKERS TRAINED BY MANUFACTURER, INCLUDING A FULL–TIME ON–SITE SUPERVISOR WITH A MINIMUM OF TEN YEARS' EXPERIENCE INSTALLING SIMILAR WORK, AND ABLE TO COMMUNICATE VERBALLY WITH CONTRACTOR, ARCHITECT, AND EMPLOYEES.

B. MANUFACTURER QUALIFICATIONS: A QUALIFIED MANUFACTURER LISTED IN THIS SECTION WITH MINIMUM TEN YEARS EXPERIENCE IN MANUFACTURE OF WATERPROOFING AS ONE OF ITS PRINCIPAL PRODUCTS.

1. MANUFACTURER'S PRODUCT SUBMITTED HAS BEEN IN SATISFACTORY OPERATION ON FIVE SIMILAR INSTALLATIONS FOR AT LEAST TEN YEARS.
2. APPROVAL OF MANUFACTURERS AND COMPARABLE PRODUCTS: SUBMIT THE FOLLOWING IN ACCORDANCE WITH PROJECT SUBSTITUTION REQUIREMENTS, WITHIN TIME ALLOWED FOR SUBSTITUTION REVIEW:

A. PRODUCT DATA, INCLUDING CERTIFIED INDEPENDENT TEST DATA INDICATING COMPLIANCE WITH REQUIREMENTS.

B. SAMPLE SHOP DRAWINGS FROM SIMILAR PROJECT.

C. PROJECT REFERENCES: MINIMUM OF FIVE INSTALLATIONS OF SIMILAR SYSTEM NOT LESS THAN FIVE YEARS OLD, WITH OWNER AND ARCHITECT CONTACT INFORMATION.

D. NAME AND RESUME OF PROPOSED QUALIFIED INSPECTOR.

E. SAMPLE WARRANTY.

1.8 DELIVERY, STORAGE AND HANDLING

A. ACCEPT MATERIALS ON SITE IN MANUFACTURER'S UNOPENED ORIGINAL PACKAGING.

B. STORE PRODUCTS IN WEATHER PROTECTED ENVIRONMENT, CLEAR OF GROUND AND MOISTURE, WITHIN TEMPERATURE RANGES RECOMMENDED BY WATERPROOFING MANUFACTURER.

1.9 ENVIRONMENTAL REQUIREMENTS

A. WEATHER LIMITATIONS: PROCEED WITH INSTALLATION ONLY WHEN EXISTING AND FORECASTED WEATHER CONDITIONS PERMIT BENTONITE WATERPROOFING TO BE INSTALLED ACCORDING TO MANUFACTURERS' WRITTEN INSTRUCTIONS AND WARRANTY REQUIREMENTS.

1. DO NOT INSTALL WATERPROOFING DURING RAIN, MIST OR HEAVY FOG. IF RAIN, MIST OR SNOW IS ANTICIPATED BEFORE THE MEMBRANE IS COMPACTED BELOW–GRADE, COVER ANY EXPOSED BENTONITE OR SEAMS WITH MIN. 6 MIL POLYETHYLENE SHEET.
2. PLACING BENTONITE CLAY PRODUCTS ON DAMP SURFACES IS ALLOWED IF APPROVED IN WRITING BY MANUFACTURER.

1.10 SCHEDULING

A. SCHEDULE WORK SO WATERPROOFING APPLICATIONS MAY BE INSPECTED PRIOR TO CONCEALMENT.

1.11 WARRANTY

A. SPECIAL MANUFACTURER'S WARRANTY: MANUFACTURER'S STANDARD FORM IN WHICH WATERPROOFING MANUFACTURER AGREES TO FURNISH WATERPROOFING MATERIAL TO REPAIR OR REPLACE THOSE MATERIALS INSTALLED ACCORDING TO MANUFACTURER'S WRITTEN INSTRUCTIONS THAT EXHIBIT MATERIAL DEFECTS OR OTHERWISE FAIL TO PERFORM AS SPECIFIED UNDER NORMAL USE WITHIN WARRANTY PERIOD SPECIFIED.

1. ACCESS FOR REPAIR: OWNER SHALL PROVIDE UNIMPEDED ACCESS TO THE PROJECT AND THE WATERPROOFING SYSTEM FOR PURPOSES OF TESTING, LEAK INVESTIGATION, AND REPAIR, AND SHALL REINSTALL REMOVED CLADDING AND OVERBURDEN MATERIALS UPON COMPLETION OF REPAIR.
2. COST LIMITATION: MANUFACTURER'S OBLIGATION FOR REPAIR OR REPLACEMENT SHALL BE LIMITED TO THE ORIGINAL COST OF THE MATERIALS.
3. WARRANTY PERIOD: TEN YEARS DATE OF SUBSTANTIAL COMPLETION.

PART 2 – PRODUCTS

2.1 MANUFACTURERS

A. BASIS–OF–DESIGN PRODUCTS: PROVIDE WATERPROOFING PRODUCTS MANUFACTURED BY **TREMCO, INC., COMMERCIAL SEALANTS AND WATERPROOFING DIVISION,** BEACHWOOD OH; (866) 321–6357.

B. SOURCE LIMITATIONS: PROVIDE WATERPROOFING SYSTEM MATERIALS AND ACCESSORY PRODUCTS FROM A SINGLE–SOURCE SYSTEM MANUFACTURER.

2.2 PERFORMANCE REQUIREMENTS

A. GENERAL: WATERPROOFING SYSTEM SHALL BE CAPABLE OF PERFORMING AS A CONTINUOUS WATERTIGHT INSTALLATION AND AS A MOISTURE DRAINAGE PLANE TRANSITIONED TO ADJACENT FLASHINGS AND DISCHARGING WATER TO THE BUILDING EXTERIOR. WATERPROOFING SHALL ACCOMMODATE NORMAL SUBSTRATE MOVEMENT, CONSTRUCTION MATERIAL TRANSITIONS, OPENING TRANSITIONS, PENETRATIONS, AND PERIMETER CONDITIONS WITHOUT RESULTANT MOISTURE DETERIORATION.

B. COMPATIBILITY: PROVIDE WATERPROOFING SYSTEM MATERIALS THAT ARE COMPATIBLE WITH ADJACENT MATERIALS UNDER CONDITIONS OF SERVICE AND SUBSTRATES ON WHICH PRODUCT IS APPLIED, AS RECOMMENDED BY WATERPROOFING MANUFACTURER BASED ON TESTING AND FIELD EXPERIENCE.

2.3 COMPOSITE HDPE/BENTONITE MEMBRANE

A. **COMPOSITE HDPE/BENTONITE MEMBRANE:** COMPOSITE MEMBRANE CONSISTING OF A 20–MIL– (0.5–MM–) THICK, HDPE GEOMEMBRANE LINER BONDED TO UP TO 1.0 LB/SQ. FT. (4.9 K/M2) LAYER OF BENTONITE CLAY GRANULES, WITH A SPUN POLYPROPYLENE FACING.

1. BASIS OF DESIGN PRODUCT: **TREMCO, INC., PARASEAL LG.**
2. PUNCTURE RESISTANCE, ASTM E 154: NOT LESS THAN 155 LBF (689 N).
3. TENSILE STRENGTH, ASTM D 412: NOT LESS THAN 4,000 PSI (28 MPA).
4. ELONGATION, ASTM D 412: NOT LESS THAN 500 PERCENT.
5. VAPOR PERMEANCE, ASTM E 96: NOT GREATER THAN 0.03 PERMS.
6. RESISTANCE TO HYDROSTATIC HEAD, ASTM D 5385: 230 FEET (70 M).
7. COLOR: GRAY/BLACK.

2.4 ACCESSORY MATERIALS

A. GRANULAR BENTONITE: SODIUM BENTONITE CLAY CONTAINING A MINIMUM OF 90 PERCENT MONTMORILLONITE (HYDRATED ALUMINUM SILICATE), WITH A MINIMUM OF 90 PERCENT PASSING A NO. 20 (0.85–MM) SIEVE.

A. BASIS OF DESIGN PRODUCT–TR**EMCO, INC., PARAGRANULAR**

B. BENTONITE MASTIC: TROWELABLE CONSISTENCY, BENTONITE COMPOUND, SPECIFICALLY FORMULATED FOR APPLICATION AT JOINTS AND PENETRATIONS.

A. BASIS OF DESIGN PRODUCT – **TREMCO, INC., PARAMASTIC**

C. TERMINATION BAR: EXTRUDED–ALUMINUM OR FORMED–STAINLESS–STEEL BARS WITH UPPER FLANGE TO RECEIVE SEALANT.

A. BASIS OF DESIGN PRODUCT – TREMCO, INC., PARASEAL PARATERM BAR

D. PLASTIC PROTECTION SHEET: POLYETHYLENE SHEETING COMPLYING WITH ASTM D 4397; THICKNESS RECOMMENDED BY WATERPROOFING MANUFACTURER TO SUIT APPLICATION BUT AT LEAST 6 MILS (0.15 MM) THICK.

E. CEMENT GROUT PATCHING MATERIAL: MANUFACTURER'S RECOMMENDED GROUT MIX COMPATIBLE WITH SUBSTRATE BEING PATCHED.

F. MASONRY FASTENERS: CASE–HARDENED NAILS OR HARDENED–STEEL, POWDER–ACTUATED FASTENERS. DEPENDING ON MANUFACTURER'S WRITTEN REQUIREMENTS, PROVIDE 1/2– OR 1–INCH– (13– OR 25–MM–) DIAMETER WASHERS UNDER FASTENER HEADS.

G. TAPES: WATERPROOFING MANUFACTURER'S RECOMMENDED TAPE FOR JOINTS BETWEEN SHEETS, MEMBRANES, OR PANELS. USE WITH RECOMMENDED ADHESIVE BONDING PRIMER.

1. REINFORCED OVERLAP SEAM TAPE: REINFORCED, RUBBERIZED–ASPHALTIC WATERPROOFING SEAM TAPE 4–INCH (102 MM) WIDE BY 60 MILS (1.5 MM) THICK FOR SEALING MEMBRANE OVERLAPS.

A. BASIS OF DESIGN PRODUCT – **TREMCO, INC., PERMANENT SEAM TAPE**

2. NON–REINFORCED OVERLAP TAPE: NON–REINFORCED, ADHESIVE TAPE OF PARTIALLY CROSS–LINKED POLYMERIC ELASTOMERS 2 BY 1/8 INCH (50 BY 3.2 MM) FOR MOLDING FORM–FIT SEALS AROUND CONTOURS AND FOR TAPING SEAMS WITHIN OVERLAPS.

A. BASIS OF DESIGN PRODUCT – **TREMCO, INC., PARA JT**

3. BENTONITE LAMINATE TAPE: LAMINATE OF BENTONITE SANDWICHED BETWEEN A NETTING AND NON–WOVEN FABRIC FOR WRAPPING THROUGH–CONCRETE IMBEDS AND OTHER DETAILING.

A. BASIS OF DESIGN PRODUCT – **TREMCO, INC., PARASTICK 'N' DRY**

H. WATERSTOPS: FLEXIBLE, REINFORCED, BENTONITE–LAMINATE OF BENTONITE SANDWICHES BETWEEN A NETTING AND NON–WOVEN FABRIC FOR WRAPPING THROUGH–CONCRETE IMBEDS AND OTHER DETAILING.

A. BASIS OF DESIGN PRODUCT – **TREMCO, INC., SUPERSTOP**

I. JOINT SEALANTS: TERMINATION SEALS:

1. SINGLE COMPONENT, HIGH PERFORMANCE, MEDIUM–MODULUS, LOW–VOC, UV–STABLE, NON–SAG POLYURETHANE SEALANT.

A. BASIS OF DESIGN PRODUCT: **TREMCO INC.; DYMONIC 100.**

2.5 PRODUCT SUBSTITUTIONS

1. SUBSTITUTIONS: NO SUBSTITUTIONS SHALL BE PERMITTED, UNLESS PROPOSED SUBSTITUTIONS OFFERING EQUIVALENT OR SUPERIOR PERFORMANCE, IF ANY, ARE FIRST SUBMITTED IN ACCORDANCE WITH THE PROVISIONS OF SECTION 1.5, AND APPROVED IN WRITING BOTH BY WATERPROOFING CONSULTANT AND ARCHITECT PRIOR TO CONTRACTOR'S DELIVERY AND INSTALLATION.

PART 3 – EXECUTION

3.1 EXAMINATION

A. SURFACE CONDITION: BEFORE APPLYING WATERPROOFING MATERIALS, EXAMINE SUBSTATE CONDITIONS.

B. PROCEED WITH INSTALLATION ONCE UNSATISFACTORY CONDITIONS HAVE BEEN CORRECTED.

3.2 INTERFACE WITH OTHER WORK

A. SEQUENCING OF WORK: COORDINATE SEQUENCING OF WATERPROOFING INSTALLATION WITH WORK OF OTHER SECTIONS THAT FORM PORTIONS OF BUILDING ENVELOPE MOISTURE CONTROL TO ENSURE THAT FLASHINGS AND TRANSITION MATERIALS CAN BE PROPERLY INSTALLED AND INSPECTED.

B. SUBSEQUENT WORK: COORDINATE WATERPROOFING INSTALLATION WITH WORK OF OTHER SECTIONS INSTALLED SUBSEQUENT TO WATERPROOFING TO ENSURE COMPLETE INSPECTION OF INSTALLED WATERPROOFING AND SEALING OF WATERPROOFING PENETRATIONS NECESSITATED BY SUBSEQUENT WORK.

3.3 PREPARATION

A. CLEAN, PREPARE, AND TREAT SUBSTRATES. FILL VOIDS WITH CEMENT GROUT OR PARAMASTIC AS RECOMMENDED BY MANUFACTURER.

B. FORMED CONCRETE SURFACES: REMOVE FINS AND PROJECTIONS. FILL VOIDS, FORM–TIE HOLES, AND OTHER DEFECTS GREATER THAN 1/4 INCH (6 MM) IN DEPTH.

C. HORIZONTAL CONCRETE SURFACES: REMOVE STANDING WATER, DEBRIS, AND SUBSTANCES THAT MAY IMPAIR BONDING OF PATCHING MATERIALS OR EFFECTIVENESS OF WATERPROOFING. FILL VOIDS AND OTHER DEFECTS GREATER THAN 1/4 INCH (6 MM) IN DEPTH.

D. EXCAVATION SUPPORT AND PROTECTION SYSTEM: FILL MINOR GAPS AND SPACES 1 (25 MM) WIDE OR WIDER WITH APPROPRIATE FILLING MATERIAL. COVER OR FILL LARGE VOIDS AND CREVICES.

3.4 INSTALLATION, GENERAL

A. INSTALL WATERPROOFING AND ACCESSORIES ACCORDING TO MANUFACTURER'S WRITTEN INSTRUCTIONS. PROTECT BENTONITE MATERIAL FROM WETTING PRIOR TO PERMANENT PLACEMENT.

1. INSTALL A CONTINUOUS LAYER OF WATERPROOFING MEMBRANE WITH ENDS AND EDGES LAPPED A MINIMUM OF 4 INCHES (102 MM). STAGGER END JOINTS, SEAL LAPS AND TREAT FASTENER PENETRATIONS IN ACCORDANCE WITH MANUFACTURER'S WRITTEN INSTRUCTIONS.
2. APPLY PARAGRANULAR AROUND PENETRATIONS IN HORIZONTAL SURFACES AND CHANGES IN PLANE ACCORDING TO MANUFACTURER'S DETAILS.
3. APPLY PARAMASTIC AT CHANGES OF PLANE, CONSTRUCTION JOINTS IN SUBSTRATE, PROJECTIONS, AND PENETRATIONS.

B. PROTECT WATERPROOFING FROM DAMAGE AND WETTING DURING CONSTRUCTION. REPAIR PUNCTURES, TEARS, AND CUTS.

3.7 BELOW–SLAB WATERPROOFING

A. BELOW STRUCTURAL SLABS–ON–GRADE: APPLY WATERPROOFING MEMBRANE WITH HDPE SIDE DOWN.

1. INSTALL MEMBRANE SHEETS BENTONITE–SIDE UP. STAPLE SEAMS WHERE SUBJECT TO DISPLACEMENT DURING CONCRETE PLACEMENT.
2. INSTALL UNDER FOOTINGS, GRADE BEAMS, AND PILE CAPS; OR CONTINUE WATERPROOFING THROUGH KEY JOINTS BETWEEN FOOTINGS AND FOUNDATION WALLS, AND EXTEND A MINIMUM OF 8 INCHES (200 MM) UP OR BEYOND PERIMETER SLAB FORMS. STAGGER SEAMS MINIMUM 12 INCHES (305 MM).
3. INSTALL UNDER SLABS STARTING AT LOWEST POINT, INSTALL A CONTINUOUS LAYER OF WATERPROOFING MEMBRANE, WITH ENDS AND EDGES LAPPED A MINIMUM OF 4 INCHES (102 MM).
4. PROTECT WATERPROOFING FROM DAMAGE CAUSED BY REINFORCING BAR SUPPORTS WITH SHARP EDGES.

3.9 FIELD QUALITY CONTROL

A. TESTING AGENCY: CONTRACTOR SHALL ENGAGE A QUALIFIED TESTING AGENCY TO INSPECT SUBSTRATE CONDITIONS, SURFACE PREPARATION, WATERPROOFING APPLICATION, PROTECTION, AND DRAINAGE COMPONENTS, AND TO FURNISH REPORTS TO ARCHITECT.

B. REPORTING: FORWARD WRITTEN INSPECTION REPORTS TO THE ARCHITECT OF THE INSPECTION AND TEST BEING PERFORMED.

C. CORRECTION: CORRECT DEFICIENT APPLICATIONS NOT PASSING TESTS AND INSPECTIONS, MAKE NECESSARY REPAIRS, AND RETEST AS REQUIRED TO DEMONSTRATE COMPLIANCE WITH REQUIREMENTS.

3.10 CLEANING AND PROTECTING

A. PROTECT PARASEAL FROM MOISTURE PRIOR TO CONCRETE PLACEMENT.

END OF SECTION

Silva Design Construction Inc.

TITLE SHEET

Apartments Structure
2100 Scholarship
Irvine, CA 92614

DRAWN BY SSH
CHECKED BY SSH
SSH

REVISIONS

NUMBER	DATE	BY
1	08/05/2025	PCC #1
2		

LICENSED ARCHITECT
SHAHZAD SHEENA HABIBIAN
C-39787
05-31-2025
RENEWAL DATE
STATE OF CALIFORNIA

DATE ISSUED 08-05-25

DATE PRINTED

PROJECT REF. NUMBER

A0.2

SHEET NUMBER

SPECIFICATIONS (CONTINUED)

DIVISION 08 - DOORS AND WINDOWS

8.1: FABRICATE AND DELIVER ALL WOOD DOOR AND PANEL WORK AS INDICATED, SPECIFIED, AND REQUIRED TO COMPLETE THE WORK.

8.2: FURNISH ALL FINISH HARDWARE REQUIRED TO COMPLETE THE WORK AS INDICATED ON THE DRAWINGS AND AS HEREIN SPECIFIED. PROVIDE ALL TRIM, ATTACHMENTS AND FASTENINGS SPECIFIED OR REQUIRED FOR PROPER AND COMPLETE INSTALLATION.

8.3: COORDINATE HARDWARE WITH OTHER WORK. FURNISH HARDWARE ITEMS OF PROPER DESIGN FOR USE ON THE DOORS AND FRAMES OF THE THICKNESS, PROFILES, SWING, SECURITY AND SIMILAR REQUIREMENTS.

8.4: OUTSWINGING EXTERIOR DOORS SHALL HAVE NON-REMOVABLE PINS.

DIVISION 09 - FINISHES

9.1: ALL FINISHES SHALL CONFORM TO THE CALIFORNIA RESIDENTIAL CODE, CHAPTER 7.

9.2: FINISH CARPENTRY

A. ALL INTERIOR WOOD TRIM, POSTS, STOPS, HANDRAILS, ETC. SHALL BE S4S WHITE PINE.

B. PROTECT ALL WORK FROM HAMMER MARKS, NICKS, SCRATCHES, ETC.

9.1: GYPSUM WALL BOARD

A. PERFORM ALL GYPSUM WALL BOARD WORK, INCLUDING MATERIALS, HANDLING, STORING, CUTTING, INSTALLING, TAPING AND FINISHING, IN ACCORDANCE WITH ANSI A97.1, WITH MANUFACTURER'S RECOMMENDATIONS, AND WITH RELEVANT CODE AUTHORITIES' CURRENT REQUIREMENTS. INSTALL NO INTERIOR GYPSUM WALL BOARD UNTIL AREAS ARE WEATHERTIGHT. COMPLETED INSTALLATIONS SHALL CONFORM TO APPLICABLE FIRE-RATING REQUIREMENTS, BUILDING CODE APPROVALS, AND TO GYPSUM WALLBOARD MANUFACTURER'S REQUIREMENTS UNLESS EXCEEDED IN THIS SECTION.

B. EXAMINE ALL SURFACES BEFORE APPLYING ANY PLASTER AND NOTIFY ARCHITECT IN WRITING OF ANY UNSATISFACTORY CONDITIONS. STARTING WORK WITHOUT NOTIFICATION SHALL BE CONSTRUED AS ACCEPTANCE BY CONTRACTOR OF SURFACES TO RECEIVE HIS WORK.

C. DELIVER ALL MATERIALS IN ORIGINAL UNBROKEN PACKAGES, CONTAINERS OR BUNDLES BEARING THE BRAND NAME AND NAME OF MANUFACTURER OR SUPPLIER FOR WHOM PRODUCT IS MANUFACTURED. KEEP MATERIALS DRY AND PROTECTED FROM WEATHER AND DAMAGE. TAKE CARE TO AVOID DAMAGE TO EDGES, ENDS AND SURFACES OF GYPSUM WALL BOARD AND PROTECT METAL ITEMS AND FINISHES THEREON.

D. GYPSUM WALL BOARD SHALL CONFORM TO ASTM C-366. THICKNESS SHALL BE 5/8" THROUGHOUT.

E. METAL TRIM AND CORNER BEADS: ELECTRO-GALVANIZED STEEL AS MANUFACTURED OR RECOMMENDED BY DRYWALL MANUFACTURER WITH CORNER BEADS AT ALL OUTSIDE CORNERS AND "J" SHAPED CASING BEADS WHERE ABUTTING WORK OF OTHER TRADES.

F. TAPING AND FINISHING ACCESSORIES: MANUFACTURED OR RECOMMENDED BY WALL BOARD MANUFACTURER. PROVIDE PERFORATED TAPE, BEDDING AND TAPING COMPOUND, AND TOPPING COMPOUND.

G. WHILE DRYWALL IS BEING INSTALLED, MAINTAIN INTERIOR TEMPERATURE OF NOT LESS THAN 65 DEGREES FAHRENHEIT. PROVIDE VENTILATION TO ELIMINATE EXCESS MOISTURE.

H. INSTALL DRYWALL FASTENERS UNTIL HEAD OF FASTENER IS JUST BELOW WALLBOARD SURFACE WITHOUT BREAKING SURFACE PAPER. FASTENER SIZE, TYPE AND SPACING SHALL CONFORM TO CODE APPROVALS.

I. WALL BOARD AROUND OPENINGS IN WALLS OR PARTITIONS SHALL BE ACCURATELY CUT AND FITTED. OPENINGS SHALL BE CUT OUT; DO NOT CUT WALL BOARD TO JAMB AND PIECE OUT OVERHEAD. DIMENSION FROM JOINT ABOVE AN OPENING TO JAMB OF OPENINGS SHALL BE 6" MINIMUM. STAGGER JOINTS ON OPPOSITE SIDE OF PARTITIONS.

J. GYPSUM WALL BOARD CEILINGS: APPLY WALL BOARD WITH LONG DIMENSION AT RIGHT ANGLES TO FRAMING, CENTERED OVER FRAMING MEMBER NEATLY FITTED AND STAGGERED. USE WALL BOARD OF MAXIMUM PRACTICAL LENGTH TO MINIMIZE END JOINTS AND PROPERLY SUPPORT AROUND CUTOUTS AND OPENINGS. SECURE WITH APPROPRIATE FASTENERS. INSTALL GYPSUM WALL BOARD CEILINGS OVER RESILIENT CHANNEL OR ISOLATION CLIPS WITH HAT CHANNELS, WHERE SHOWN IN THE DRAWINGS AND SCHEDULES.

K. ALL EXPOSED GYPSUM WALL BOARD SHALL BE PROVIDED IN A SMOOTH LEVEL 4 FINISH IN ACCORDANCE WITH GA 214-2015.

L. APPLY JOINT BEDDED CEMENT, TAPE AND AT LEAST TWO COATS OF FINISHING CEMENT OVER ALL EXPOSED JOINTS, INCLUDING ALL UNEXPOSED CEILING SPACES, AND OTHER AS REQUIRED FOR SOUND OR FIRE-RATED CONSTRUCTION. APPLY JOINT CEMENT AND TWO OR MORE LAYERS OF FINISHING CEMENT OVER FASTENERS.

M. FINISH INSIDE CORNERS WITH JOINTS CEMENT, TAPE AND FINISHING CEMENT. FINISH OUTSIDE CORNERS WITH GYPSUM WALL BOARD METAL CORNER REINFORCEMENT AND FINISHING CEMENT.

N. PROVIDE "J" SHAPED METAL CASING BEAD AT ALL EDGES OF GYPSUM WALL BOARD WHICH ABUT CEILING, WALL OR COLUMN FINISH, AND ELSEWHERE AS REQUIRED, SUCH AS OPENINGS, OFFSETS, ETC.

O. JOINTS AND ATTACHMENTS SHALL BE NON-APPARENT FOLLOWING APPLICATION OF PAINT OR OTHER FINISHES. IF JOINTS AND FASTENERS ARE APPARENT AFTER APPLICATION OF FINISHES, CONTRACTOR SHALL CORRECT DEFECTS TO ARCHITECT'S SATISFACTION. COST OF CORRECTIONS AND REMOVAL AND REPLACEMENT OF FINISHES ON GYPSUM WALL BOARD SHALL BE BORNE BY THE CONTRACTOR AT NO EXTRA COST TO THE OWNER. SEAL ROW EDGES OF BOARDS THAT HAVE BEEN CUT TO FIT WITH MANUFACTURER'S RECOMMENDED SEALANT, BRUSHED ON.

P. WHEN GYPSUM WALL BOARD WORK HAS BEEN COMPLETED AND JUST PRIOR TO INSTALLATION OF FINISH MATERIALS BY OTHER TRADES, REPAIR BROKEN, DENTED, SCRATCHED OR OTHERWISE DAMAGED PORTIONS OF GYPSUM WALL BOARD SURFACES.

9.1: TILE:

A. APPLICABLE STANDARDS:

1. THE FOLLOWING PUBLICATIONS OF THE ISSUES LISTED BELOW, BUT REFERRED TO THEREAFTER BY BASIC DESIGNATION ONLY, FORM A PART OF THIS SPECIFICATION TO THE EXTEND THEY ARE SPECIFIED HEREIN. UNLESS OTHERWISE SPECIFIED, USE THE LATEST EDITION.
   a. AMERICAN NATIONAL STANDARDS INSTITUTE (ANSI):
   i. A108.5, "INSTALLATION OF CERAMIC TILE WITH DRY-SET PORTLAND CEMENT MORTAR OR LATEX PORTLAND CEMENT MORTAR"
   ii. A10.8/10, "STANDARD SPECIFICATION FOR INSTALLATION OF GROUT IN CERAMIC TILE INSTALLATIONS"
   iii. A118.4, "LATEX-PORTLAND CEMENT MORTAR"
   iv. A137.1, "AMERICAN NATIONAL STANDARD SPECIFICATION FOR CERAMIC TILE"
   b. CERAMIC TILE INSTITUTE:
   i. "STANDARDS OF THE TILE TRADE"
   ii. CTI 69-5, "SPECIAL PURPOSE TILE"
   iii. CTI TM-68 "TESTED MATERIALS"

B. JOB CONDITIONS:

1. INSTALL MORTAR, AND SET AND GROUT TILE, ONLY WHEN THE TEMPERATURE IS AT LEAST 50 DEGREES FAHRENHEIT AND RISING.
2. PROTECT ADJACENT SURFACES DURING PROGRESS OF THE WORK OF THE SECTION UNTIL MORTAR AND GROUND HAVE SET FOR 72 HOURS.
3. SHADE THE WORK AREA FROM DIRECT SUNLIGHT DURING THE INSTALLATION AS NEEDED TO PREVENT RAPID EVAPORATION CAUSED BY EXCESSIVE HEAT.
4. OBSERVE THE MANUFACTURER'S RECOMMENDED SAFETY PRECAUTIONS, INCLUDING THOSE PERTAINING TO VENTILATION.
5. UPON COMPLETION OF THE WORK OF THIS SECTION, DELIVER TO THE OWNER ADDITIONAL TILE AND TRIM SHAPES OF EACH TYPE, COLOR, PATTERN, AND SIZE USED IN THE WORK, FOR THE OWNER'S USE IN REPLACEMENT AND MAINTENANCE, AT THE RATE OF 3 PERCENT OF THE AMOUNT USED IN THE WORK, PACKAGED SECURELY TO PREVENT DAMAGE, AND CLEARLY LABELED.
6. PROVIDE ALL BASES, CAPS, STOPS, RETURNS, TRIMMERS AND OTHER SHAPES INDICATED OR REQUIRED TO PRODUCE A COMPLETELY FINISHED INSTALLATION.
7. WATERPROOFING MEMBRANE: WHERE INDICATED ON THE DRAWINGS, AND ELSEWHERE AS REQUIRED TO PREVENT PASSAGE OF WATER, PROVIDE A WATERPROOF MEMBRANE USING ONE OF THOSE LISTED ON THE "TESTED MATERIALS" LIST OF THE CERAMIC TILE INSTITUTE, OR PROVIDE A SIMILAR SYSTEM APPROVED BY THE ARCHITECT.
8. PROVIDE EXPANSION / CONTROL JOINTS SEALANT IN COLORS SELECTED BY THE OWNER. AT JOINTS BETWEEN COUNTER, SPLASH AND OTHER MATERIALS, PROVIDE ONE-PART SILICONE MEMBRANE.
9. LATEX-PORTLAND CEMENT MORTAR: PROVIDE A COMMERCIALLY PREPARED MIXTURE OF PORTLAND CEMENT, EXTRA FINE SAND AND SPECIAL LATEX ADDITIVE FOR USE AS A BOND COAT FOR SETTING TILE. COMPLY WITH ANSI A118.4.
10. COMMERCIAL PORTLAND CEMENT GROUT: PROVIDE A COMMERCIALLY PREPARED MIXTURE OF PORTLAND CEMENT AND OTHER INGREDIENTS PRODUCING A WATER-RESISTANT, DENSE, UNIFORMLY COLORED MATERIAL.
11. VERIFY THAT THE SURFACES TO RECEIVE MORTAR SETTING BED AND TILE ARE FIRM, DRY, CLEAN AND FREE FROM OIL OR WAXY FILMS AND CURING COMPOUNDS.
12. VERIFY THAT GROUNDS, ANCHORS, PLUGS, RECESS FRAMES, BUCKS, ELECTRICAL AND MECHANICAL WORK BEHIND TILE HAVE BEEN INSTALLED BEFORE PROCEEDING WITH THE INSTALLATION OF THE MORTAR BED OR TILE. COMPLY WITH THE PERTINENT PROVISIONS OF THE TILE COUNCIL OF AMERICA HANDBOOK FOR CERAMICS" TILE INSTALLATION METHOD F 122-97 STANDARD.
13. LAY TILE IN A GRID PATTERN SHOWN IN THE DRAWINGS OR AS APPROVED BY THE OWNER IN THE FIELD.
14. ALIGN JOINTS WITH ADJOINING TILES IN THE SPLACH.
15. ADJUST TILE LAYOUT TO MINIMIZE TILE CUTTING.
16. PROVIDE UNIFORM JOINT WIDTHS BETWEEN TILES.
17. PROVIDE CAULKED EXPANSION / CONTROL JOINTS AT JUNCTURES BETWEEN VERTICAL AND HORIZONTAL SURFACES.
18. EXTEND OPENINGS FOR JOINTS COMPLETELY THROUGH THE TILE, MORTAR, MORTAR BED AND REINFORCING.
19. MAKE OPENINGS FOR ABOVE JOINTS THE SAME WIDTH AS THE TILE JOINTS.
20. INSTALL BACKING RODS WHERE REQUIRED AND APPLY JOINT PRIMER IN ALL WET AREAS AND ELSEWHERE AS RECOMMENDED BY THE SEALANT MANUFACTURER.
21. USE SEALANT RECOMMENDED BY THE TILE MANUFACTURER AND CTI FOR KITCHEN AND COUNTER INSTALLATIONS.
22. WHEN USING PROPRIETY GROUT, ADHERE STRICTLY TO THE MANUFACTURER'S DIRECTIONS UNLESS OTHERWISE SPECIFIED OR APPROVED IN ADVANCE BY THE ARCHITECT.
23. FORCE THE MAXIMUM AMOUNT OF THE APPROVED GROUT INTO JOINTS IN ACCORDANCE WITH PERTINENT RECOMMENDATIONS CONTAINED IN ANSI A108.10.
24. DO NOT USE ACID OR ACID CLEANERS TO CLEAN TILE.
25. WHEN THE TILE IS THOROUGHLY CLEAN AND DRY, POLISH GLAZED TILE WITH CLEAN DRY CLOTH.
26. DAMP CURE ALL TILE INSTALLATIONS, INCLUDING PORTLAND CEMENT GROUTS, FOR 72 HOURS MINIMUM.
27. COVER COMPLETED TILE INSTALLATION WITH 40 LB KRAFT PAPER AND PROTECT UNTIL BUILDING IS ACCEPTED BY OWNER.
28. DO NOT USE POLYETHYLENE SHEETS DIRECTLY OVER TILE ON HORIZONTAL SURFACES.

9.1: PAINTING

A. CONTRACTOR SHALL INCLUDE WITHIN THE SCOPE OF HIS WORK THE PREPARATION, PRIMING AND FINISH PAINTING OF EXTERIOR RAILINGS AND INTERIOR WALLS, CEILINGS, DOORS, WINDOWS, SASHES, TRIM, ETC. ALL EXPOSED WOOD SHALL BE PAINTED, STAINED AND / OR SEALED. SEE SCHEDULES FOR FINISH SELECTIONS, AND VERIFY WITH OWNER PRIOR TO ORDERING MATERIALS.

B. ALL PAINTS AND SEALERS SHALL BE APPLIED IN STRICT ACCORDANCE WITH THEIR MANUFACTURER'S SPECIFICATIONS.

C. ALL PAINT MATERIALS SHALL CONFORM TO AIR POLLUTION CONTROL DISTRICT RULE 66.

D. BEFORE STARTING WORK, DUST, DIRT, PLASTER, GREASE AND ALL OTHER EXTRANEOUS MATTER WHICH WOULD AFFECT THE FINISH WORK SHALL BE REMOVED. MAINTAIN SPACES BROOM CLEAN WHILE PAINTING IS IN PROGRESS. PREPARE ALL SURFACES AS REQUIRED BY THE MANUFACTURER FOR COATING THE MATERIAL TO BE PAINTED. NON-COMPLYING WORK IS SUBJECT TO STRIPPING AND COMPLETE RECOATING.

E. STORE PAINT MATERIALS AND EQUIPMENT WHEN NOT IN ACTUAL USE IN A PLACE SPECIFICALLY ASSIGNED FOR THAT PURPOSE. THIS PLACE SHALL BE WELL VENTILATED AND NOT SUBJECT TO DIRECT SUN RAYS. PROPERLY PROTECT FLOOR WITH DROP CLOTHS OR BUILDING PAPER. STORE PAINT MATERIALS IN TIGHTLY CLOSED CONTAINERS. NO PAINT THINNER SHALL BE STORED IN A ROOM SCHEDULED TO RECEIVE A FLOOR COVERING. REMOVE SOILED RAGS AND WASTE EVERY NIGHT AND IN GENERAL, TAKE ALL PRECAUTIONS TO AVOID SPONTANEOUS COMBUSTION AND FIRE HAZARD.

F. TO THE MAXIMUM EXTEND PRACTICABLE, FACTORY MIX EACH PAINT MATERIAL TO COLOR, GLOSS AND CONSISTENCY FOR APPLICATION. PRIMER AND SEALER COATS MAY ONLY BE THINNED AS RECOMMENDED BY THE MANUFACTURER.

G. APPLY ALL MATERIALS IN ACCORDANCE WITH THE MANUFACTURER'S INSTRUCTIONS AND AT PROPER CONSISTENCY, FREE OF BRUSH OR ROLLER MARKS, SAGS, RUNS OR ANY OTHER EVIDENCE OF POOR WORKMANSHIP. AVOID LAPPING PAINT ON OTHER SURFACES NOT TO BE PAINTED; APPLY MASKING TAPE AS NEEDED. SAND BETWEEN ENAMEL COATS AND STEELWOOL BETWEEN COATS OF SHELLAC AND LACQUER.

H. THE NUMBER OF COATS TO BE APPLIED AND SPECIFIED IN THIS SECTION ARE THE MINIMUM REQUIRED. PAINT FINISHES ARE TO BE UNIFORM IN COLOR, FREE FROM CLOUDY OR MOTTLED APPEARANCE IN SURFACE AND EVIDENT THINNESS OF COATINGS. IF DEFECTS OR FAULTS ARE FOUND, THE CONTRACTOR SHALL PAINT THE ENTIRE SURFACE TO A BREAKING POINT WITH ONE ADDITIONAL FINISH COAT OF PAINT AS SPECIFIED, AT NO COST TO THE OWNER.

I. ALL PAINTING IS TO BE THREE COAT WORK WITH PRIMER OR SEALER COATS AS RECOMMENDED BY THE PAINT MANUFACTURER AS BEING COMPATIBLE WITH TWO FINISH COATS AS SPECIFIED HEREIN.

J. FOR EVERY COLOR AND GLOSS USED IN THE WORK, THE CONTRACTOR SHALL PROVIDE THE OWNER WITH A MINIMUM OF ONE UNOPENED GALLON FOR FUTURE USE.

DIVISION 16 - ELECTRICAL

16.1: THE CONTRACTOR SHALL SECURE ALL REQUIRED PERMITS. PROVIDE AND INSTALL OVER-CURRENT DEVICES, CONDUCTORS, RECEPTACLES AND SWITCHES IN STRICT ACCORDANCE WITH THE MOST CURRENT EDITION OF THE CEC AND LOCAL APPLICABLE CODES. PROVIDE DEDICATED CIRCUITS FOR OWNER-SELECTED KITCHEN APPLIANCES IN STRICT ACCORDANCE WITH THE MANUFACTURERS' SPECIFICATIONS AND APPLICABLE CODES. ALL JUNCTION BOXES SHALL BE ACCESSIBLE AS REQUIRED BY APPLICABLE CODES.

16.2: THE WORK OF THIS SECTION SHALL INCLUDE THE FURNISHING OF LABOR, MATERIALS AND EQUIPMENT NECESSARY FOR A COMPLETE ELECTRICAL SYSTEM AS SHOWN IN THE DRAWINGS, AS SPECIFIED HEREIN, AND AS REQUIRED BY CODE.

16.3: FURNISH AND INSTALL SERVICE CONDUITS, SERVICE PULL BOXES, CABLE, FITTINGS AND METERING FACILITIES COMPLETE, INCLUDING ALL CHARGES BY THE POWER COMPANY FOR A COMPLETE ELECTRICAL SYSTEM.

16.4: FURNISH AND INSTALL SERVICE CONDUITS, FITTINGS, PULL BOXES, OUTLETS AND GROUNDING, INCLUDING ALL CHARGES BY THE TELEPHONE COMPANY FOR A COMPLETE TELEPHONE SYSTEM.

16.5: NATURAL GAS PIPING SHALL NOT BE CONNECTED TO THE GROUNDING SYSTEM.

16.6: FURNISH AND INSTALL SLEEVES IN WALLS, FLOORS, PARTITIONS AND FOUNDATIONS FOR THE PASSAGE OF ALL CONDUITS. SLEEVES EXTENDING TO THE EXTERIOR OF THE BUILDING SHALL BE MADE WATERTIGHT AND WEATHER PROOF.

16.7: THE CONTRACTOR SHALL VERIFY ALL NECESSARY DIMENSIONS BEFORE INSTALLING ANY OF THE WORK, AND SHALL CHECK THE LAYOUT TO ALLOW REQUIRED CLEARANCES FOR OTHER WORK AS SHOWN IN THE MECHANICAL, PLUMBING, STRUCTURAL AND ARCHITECTURAL DRAWINGS.

16.8: THE CONTRACTOR SHALL AT ALL TIMES TAKE SUCH PRECAUTION AS MAY BE NECESSARY TO PROPERLY PROTECT THE EQUIPMENT AND ACCESSORIES COVERED UNDER THIS CONTRACT FROM DAMAGE. THE CONTRACTOR SHALL PROTECT HIS WORK BY KEEPING ALL CONDUITS CAPPED, PLUGGED OR OTHERWISE PROTECTED FROM INJURY INCLUDING POSSIBLE DAMAGE FROM STOPPAGE OF CONDUITS BY BUILDING MATERIALS SUCH AS CEMENT, CONCRETE, SAND OR DIRT AND SHALL REPAIR ANY SUCH INJURY OR DAMAGE WITHOUT ADDITIONAL CHARGE TO THE OWNER.

16.9: FURNISH AND INSTALL ALL OUTLET AND JUNCTION BOXES FOR ALL ELECTRICAL SYSTEMS INCLUDING LIGHT, POWER, ALARM AND TELEPHONE. ALL OUTLET BOXES SHALL BE LOCATED CONCEALED FLUSH IN WALLS, FLOORS AND CEILINGS UNLESS SPECIFICALLY NOTED OTHERWISE.

16.10: ALL OUTLET BOXES LOCATED CONCEALED IN WALLS, CEILINGS AND FLOORS ABOVE GRADE SHALL BE GALVANIZED OR SHERARDISED, ONE PIECE PRESSED STEEL, KNOCKOUT TYPE. ALL EXTERIOR OR DAMP LOCATION BOXES AND FITTINGS SHALL BE APPROVED DAMP OR WATERPROOF USE.

16.11: PROVIDE PLASTER TINGS WHERE REQUIRED.

DIVISION 21 - FIRE SUPRESSION

21.1: SPRINKLERS ARE REQUIRED IN NEW SINGLE FAMILY DWELLINGS. PROVIDE AN APPROVED AUTOMATIC FIRE SPRINKLER SYSTEM. PLANS SHALL BE SUBMITTED TO THE SPRINKLER PLAN CHECK UNIT FOR REVIEW AND APPROVAL PRIOR TO INSTALLATION.

21.2: SPRINKLERS SHALL BE NEW LISTED RESIDENTIAL TYPE SPRINKLERS AND SHALL BE INSTALLED PER THE MANUFACTURERS SPECIFICATIONS.

21.3: FIRE SPRINKLER SYSTEM SHALL BE PROVIDED WITH CONCEALED-TYPE SPRINKLER HEADS, WITH FLAT COVER PLATES. COVER PLATE COLOR PER OWNER. DO NOT PAINT COVER PLATE.

DIVISION 31 - EARTHWORK

31.1: ALL FOUNDATION EXCAVATIONS SHALL BE INSPECTED BY THE BUILDING DEPARTMENT AND PROJECT SOILS ENGINEER PRIOR TO PLACING STEEL OR CONCRETE. THE INSPECTION OF THE FOOTINGS SHALL DETERMINE IF THEY ARE FOUNDED IN THE RECOMMENDED STRATA BEFORE PLACEMENT OF STEEL AND CALLING THE BUILDING DEPARTMENT FOR FOOTING REBAR INSPECTION.

31.2: ALL FILL TO BE PLACED MUST BE APPROVED, TESTED AND CERTIFIED BY THE PROJECT SOILS ENGINEER.

31.3: ANY RECOMMENDATIONS PREPARED BY THE PROJECT SOILS ENGINEER AND/OR GEOLOGIST FOR CORRECTING GEOLOGICAL HAZARDS FOUND DURING GRADING SHALL BE SUBMITTED TO THE BUILDING DEPARTMENT FOR APPROVAL PRIOR TO UTILIZATION IN THE FIELD.

31.4: ALL UNCERTIFIED FILL IN THE AREA OF CONSTRUCTION SHALL BE REMOVED AND RE-COMPACTED UNDER THE SUPERVISION OF THE PROJECT SOILS ENGINEER AT A GRADIENT ALLOWING DRAINAGE AWAY FROM THE BUILDING. ALL AREAS AFFECTED BY CONSTRUCTION ARE TO BE LEFT UPON COMPLETION PROPERTY DRAINED, WITH NO PONDING.

31.5: FILL UNAUTHORIZED EXCAVATIONS UNDER FOUNDATIONS OR WALL FOOTINGS BY EXTENDING THE BOTTOM ELEVATION OF CONCRETE FOUNDATION OR FOOTING TO EXCAVATION BOTTOM, WITHOUT ALTERING THE REQUIRED TOP ELEVATION.

31.6: UNAUTHORIZED EXCAVATIONS BEYOND INDICATED SUBGRADE ELEVATIONS MAY BE FILLED AND COMPACTED WITH ACCEPTABLE MATERIAL IN ACCORDANCE WITH THE REQUIREMENTS OF THE PROJECT SOILS ENGINEER AND THE STANDARDS OF THE GRADING DEPARTMENT OF THE GOVERNING AUTHORITY.

31.7: REMOVE AND DISPOSE OF EXCAVATED MATERIAL ENCOUNTERED TO OBTAIN REQUIRED SUBGRADE ELEVATIONS, INCLUDING PAVEMENT, OBSTRUCTIONS VISIBLE ON GROUND SURFACE, AND UNDERGROUND STRUCTURES AND UTILITIES.

31.8: EXISTING UNCERTIFIED FILL SHALL NOT BE USED FOR SUPPORT OF FOOTINGS, FLOOR SLABS OR PROPOSED FILL.

31.9: PLACE AND COMPACT BACKFILL AND FILL MATERIALS IN ACCORDANCE WITH THE REQUIREMENTS OF THE PROJECT SOILS ENGINEER.

31.10: SOIL SHALL BE REMOVED TO GRADES INDICATED ON DRAWINGS AND TOPSOIL SHALL BE CONSERVED FOR SPREADING OVER BACKFILL AREAS. CONTRACTOR SHALL REMOVE AND DISPOSE OF ALL EXCESS SOIL, DEBRIS AND MATERIALS NOT NEEDED FOR CONSTRUCTION.

31.11: OBTAIN THE NECESSARY PERMITS FROM OSHA PRIOR TO ISSUANCE OF A BUILDING OR GRADING PERMIT FOR TRENCHES OR OTHER EXCAVATIONS 5'-0" OR GREATER IN DEPTH.

END OF SECTION

DIVISION 33 - UTILITIES

33.1: THE CONTRACTOR SHALL FAMILIARIZE HIMSELF WITH THE LOCATION OF EXISTING UTILITIES, INCLUDING GAS, WATER, POWER, SEWER, TELEPHONE AND T.V. WHERE APPLICABLE, PRIOR TO COMMENCING WORK OR CONNECTING UTILITIES, AND SHALL BE RESPONSIBLE FOR ANY DAMAGE TO EXISTING UTILITY LINES. LOCATIONS AND ELEVATIONS OF ALL EXISTING AND NEW UTILITY LINES SHALL BE CONFIRMED WITH THE ARCHITECT PRIOR TO STARTING WORK.

33.2: THE CONTRACTOR SHALL RE-ROUTE ANY EXISTING UTILITY LINES, CONDUITS OR EQUIPMENT IN CONFLICT WITH THE NEW CONSTRUCTION AND SHALL CONFIRM THE RE-ROUTING WITH THE ARCHITECT.

33.3: THE CONTRACTOR SHALL COORDINATE ALL NEW UTILITY LINE CONSTRUCTION.

33.4: EXCAVATE UTILITY TRENCHES TO CODE AND SITE REQUIRED DEPTHS, WIDTHS, SLOPES AND INVERT ELEVATIONS. PROVIDE BEDDING COURSE OF CONTINUOUS SUPPORT FOR PIPES AND CONDUITS. NO ROCK OR OTHER UNYIELDING BEARING SURFACES ARE PERMITTED.

33.5: UTILITY TRENCH BACKFILL: PLACE AND COMPACT INITIAL BACKFILL OF SATISFACTORY SOIL MATERIAL OR SUBBASE FREE OF PARTICLES LARGER THAN ONE INCH TO A HEIGHT OF 12 INCHES OVER THE UTILITY PIPE OR CONDUIT. PLACE AND COMPACT FINAL BACKFILL OF APPROVED SOIL MATERIAL TO FINAL SUBGRADE.

33.6: BACKFILL UTILITY EXCAVATIONS PROMPTLY FOLLOWING ACCEPTANCE OF AFFECTED WORK, AND COORDINATE BACKFILLING WITH UTILITY TESTING.

END OF SECTION

SECTION 33 41 00 - SUBDRAINAGE

UNLESS OTHERWISE NOTED OR REQUIRED BY CODE, ALL SUBSURFACE DRAIN LINES SHALL BE PVC SCHEDULE 40 MINIMUM 4 INCH DIAMETER OR GREATER IF REQUIRED TO HANDLE LOAD. ALL CONNECTIONS SHALL BE PROPERLY JOINED AND SEALED SO THAT THEY ARE WATERTIGHT.

SUBSURFACE DRAIN LINES SHALL EITHER:

A. BE CONDUCTED VIA GRAVITY FLOW TO THE PUBLIC WAY AT A 2% MINIMUM SLOPE.

B. BE CONDUCTED TO A SUMP PUMP THAT SENDS STORMWATER TO THE PUBLIC WAY VIA MECHANICAL MEANS.

END OF SECTION

OTHER NOTES AND REQUIREMENTS

1. DIMENSIONS INDICATED ARE TO FACE OF FINISHED SURFACE, UNLESS NOTED OTHERWISE.
2. DIMENSIONS AND CONFIGURATION OF EXTERIOR AND INTERIOR WALLS, WINDOWS, DOORS, AND FLOOR ELEVATIONS ARE BASED ON ARCHITECT'S FIELD MEASUREMENTS AND MAY VARY FROM ACTUAL CONSTRUCTION. ALL EXISTING CONDITIONS TO BE FIELD VERIFIED BY CONTRACTOR PRIOR TO START OF CONSTRUCTION. ALL FINDINGS TO BE PROVIDED TO ARCHITECT AND OWNER FOR REVIEW PRIOR TO CONSTRUCTION. THE ARCHITECT DOES NOT WARRANTY THAT THE EXISTING CONDITIONS ARE ACCURATE ON THE PLAN AS SHOWN. ANY VARIATIONS FROM THE PLANS AS SHOWN ARE THE SOLE RESPONSIBILITY OF THE CONTRACTOR.
3. LANDING AT A DOOR SHALL HAVE A LENGTH MEASURED IN THE DIRECTION OF TRAVEL OF NO LESS THAN 36".
4. A LANDING SHALL BE PROVIDED AT THE TOP AND BOTTOM OF STAIRWAYS.
5. HEATER SHALL BE CAPABLE OF MAINTAINING A MINIMUM ROOM TEMPERATURE OF 68°F AT A POINT 3 FEET ABOVE THE FLOOR AND 2 FEET FROM EXTERIOR WALLS IN ALL HABITABLE ROOMS AT THE DESIGN TEMPERATURE (R303.9).
6. LOTS SHALL BE GRADED TO DRAIN SURFACE WATER AWAY FROM FOUNDATION WALLS WITH A MINIMUM FALL OF 6 INCHES WITHIN THE FIRST 10 FEET. (R401.3).
7. PROTECTION OF WOOD AND WOOD BASED PRODUCTS FROM DECAY SHALL BE PROVIDED IN THE LOCATIONS SPECIFIED PER SECTION R317.1 BY THE USE OF NATURALLY DURABLE WOOD OR WOOD THAT IS PRESERVATIVE–TREATED IN ACCORDANCE WITH AWPA U1 FOR THE SPECIES, PRODUCT, PRESERVATIVE AND END USE. PRESERVATIVES SHALL BE LISTED IN SECTION 4 OF AWPA U1.
8. FENCES, PLANTERS AND RETAINING WALLS SHALL NOT EXCEED A HEIGHT OF 3.5 FT ABOVE THE NATURAL GROUND LEVEL IN THE REQUIRED FRONT YARD.
9. ALL INTERIOR AND EXTERIOR STAIRWAYS SHALL BE ILLUMINATED (R303.6)
10. BUILDINGS SHALL HAVE APPROVED ADDRESS NUMBERS, BUILDING NUMBERS OR APPROVED BUILDING IDENTIFICATION PLACED IN A POSITION THAT PLAINLY LEGIBLE AND VISIBLE FROM THE STREET OR ROAD FRONTING THE PROPERTY. (R319)
11. ALL WOOD SILLS ON CONCRETE SHALL BE PRESSURE TREATED DOUGLAS FIR.
12. MAINTAIN 8" BETWEEN FINISH GRADE AND SILL.
13. PROVIDE 18" MIN. CLEARANCE FOR WOOD MEMBERS ABOVE GRADE.
14. FLOOR JOISTS SHALL NOT BE NOTCHED OR DAPPED IN ANY WAY UNLESS DETAILED.
15. PROVIDE APPROVED FLASHING AT ALL EXTERIOR OPENINGS.
16. ALL STRUCTURAL FIELD WELDING REQUIRES A SPECIAL INSPECTION.
17. ALL STRUCTURAL SHOP WELDING REQUIRES A SPECIAL INSPECTION UNLESS PERFORMED IN THE SHOP OF A LICENSED FABRICATOR, WHO SHALL SUBMIT A CERTIFICATE OF FABRICATION TO THE BUILDING OFFICIAL BEFORE FRAMING APPROVAL.
18. NATURAL VENTILATION SHALL BE THROUGH WINDOWS, DOORS, LOUVERS OR OTHER APPROVED OPENINGS TO THE OUTDOOR AIR. SUCH OPENINGS SHALL BE PROVIDED WITH READY ACCESS OR SHALL OTHERWISE BE READILY CONTROLLABLE BY THE BUILDING OCCUPANTS. THE MINIMUM OPENABLE AREA TO THE OUTDOORS SHALL BE 4 PERCENT OF THE FLOOR AREA BEING VENTILATED. (CRC 303.1) IN LIEU OF EXTERIOR OPENINGS FOR HABITABLE ROOMS, A MECHANICAL VENTILATING SYSTEM MEETING THE CALIFORNIA MECHANICAL CODE REQUIREMENTS MAY BE PROVIDED. (CRC R303)
19. ADJOINING ROOMS. FOR THE PURPOSE OF DETERMINING LIGHT AND VENTILATION REQUIREMENTS, ANY ROOM SHALL BE CONSIDERED AS A PORTION OF AN ADJOINING ROOM WHEN AT LEAST ONE-HALF OF THE AREA OF THE COMMON WALL IS OPEN AND UNOBSTRUCTED AND PROVIDES AN OPENING OF NOT LESS THAN ONE-TENTH OF THE FLOOR AREA OF THE INTERIOR ROOM BUT NOT LESS THAN 25 SQUARE FEET (2.3 M2). (CRC 303.2)
20. DAMPPROOFING, WHERE REQUIRED, SHALL BE INSTALLED WITH MATERIALS AS REQUIRED IN SECTION R406.1.
21. SKYLIGHTS AND SLOPED GLAZING SHALL COMPLY WITH SECTION R308.6.
22. PROVIDE SAFEGUARDING FEATURES DURING CONSTRUCTION SUCH AS PROTECTION OF ADJOINING PROPERTY AS REQUIRED BELOW AND OTHER ITEMS SUCH AS SITE FENCING AND BARRIERS (CBC 306), SANITATION (CBC 3305), ETC.
23. PLUMBING FIXTURES ARE REQUIRED TO BE CONNECTED TO A SANITARY SEWER OR TO AN APPROVED SEWAGE DISPOSAL SYSTEM. (R306.3)
24. KITCHEN SINKS, LAVATORIES, BATHTUBS, SHOWERS, BIDETS, LAUNDRY TUBS AND WASHING MACHINE OUTLETS SHALL BE PROVIDED WITH HOT AND COLD WATER AND CONNECTED TO AN APPROVED WATER SUPPLY. (R306.4)
25. BATHTUB AND SHOWER FLOORS, WALLS ABOVE BATHTUBS WITH A SHOWER HEAD, AND SHOWER COMPARTMENTS SHALL BE FINISHED WITH A NON-ABSORBANT SURFACE. SUCH WALL SURFACES SHALL EXTEND TO A HEIGHT OF NOT LESS THAN 6 FEET ABOVE THE FLOOR. (R307.2)
26. PROVIDE ULTRA LOW FLUSH WATER CLOSETS FOR ALL NEW CONSTRUCTION. EXISTING SHOWER HEADS AND TOILETS MUST BE ADAPTED FOR LOW WATER CONSUMPTION.
27. PROVIDE 70" HIGH NON-ABSORBANT WALL ADJACENT TO SHOWER AND APPROVED SHATTER-RESISTANT MATERIALS FOR SHOWER ENCLOSURE. (R308)
28. FOR AN EXISTING POOL ON-SITE, AN ANTI-ENTRAPMENT COVER MEETING THE CURRENT ASTM OR ASME IS REQUIRED FOR THE SUCTION OUTLETS OF THE SWIMMING POOL, TODDLER POOL AND SPA FOR SINGLE FAMILY DWELLINGS PER ASSEMBLY BILL (AB) NO.2977.
29. AUTOMATIC GARAGE DOOR OPENERS, IF PROVIDED, SHALL BE LISTED IN ACCORDANCE WITH UL 325.
30. SMOKE DETECTORS SHALL BE PROVIDED FOR ALL DWELLING UNITS INTENDED FOR HUMAN OCCUPANCY, UPON THE OWNER'S APPLICATION FOR A PERMIT FOR ALTERATIONS, REPAIRS OR ADDITIONS EXCEEDING ONE THOUSAND DOLLARS ($1000). (R314.6.2)
31. WHERE A PERMIT IS REQUIRED FOR ALTERATIONS, REPAIRS OR ADDITIONS EXCEEDING ONE THOUSAND DOLLARS ($1000), EXISTING DWELLINGS OR SLEEPING UNITS THAT HAVE ATTACHED GARAGES OR FUEL-BURNING APPLIANCES SHALL BE PROVIDED WITH A CARBON MONOXIDE ALARM IN ACCORDANCE WITH SECTION R315.1. CARBON MONOXIDE ALARMS SHALL ONLY BE REQUIRED IN THE SPECIFIC DWELLING
32. EVERY SPACE INTENDED FOR HUMAN OCCUPANCY SHALL BE PROVIDED WITH NATURAL LIGHT BY MEANS OF EXTERIOR GLAZED OPENINGS IN ACCORDANCE WITH SECTION R303.1, OR SHALL BE PROVIDED WITH ARTIFICIAL LIGHT THAT IS ADEQUATE TO PROVIDE AN AVERAGE ILLUMINATION OF 6 FOOT-CANDLES OVER THE AREA OF THE ROOM AT A HEIGHT OF 30 INCHES ABOVE THE FLOOR LEVEL. (R303.1)
33. A COPY OF THE EVALUATION REPORT AND / OR CONDITIONS OF LISTING SHALL BE MADE AVAILABLE AT THE JOB SITE.
34. DUCTS IN THE GARAGE AND DUCTS PENETRATING THE WALLS OR CEILINGS SEPARATING THE DWELLING FROM THE GARAGE SHALL BE CONSTRUCTED OF A MINIMUM NO. 26 GA SHEET STEEL AND HAVE NO OPENINGS INTO THE GARAGE. (R302.5.2)
35. IN COMBUSTIBLE CONSTRUCTION, FIREBLOCKING SHALL BE INSTALLED TO CUT OFF CONCEALED DRAFT OPENINGS (BOTH VERTICAL AND HORIZONTAL) AND SHALL FORM AN EFFECTIVE BARRIER BETWEEN FLOORS, BETWEEN A TOP STORY AND A ROOF OR ATTIC SPACE. FIREBLOCKING SHALL BE INSTALLED IN THE LOCATIONS SPECIFIED IN CBC SECTIONS 718.2.2 THROUGH 718.2.7 (R302.11).
36. A MECHANICAL VENTILATION SYSTEM IS REQUIRED IN BATHROOMS CONTAINING A BATHTUB AND/OR SHOWER, OR LAUNDRY ROOMS (1203.4.2.1, R303.3.1, CGBC 4.506.1).
37. PROVIDE A KITCHEN EXHAUST FAN (MIN 100 CFM) VENTED TO THE OUTSIDE PER ASHRAE 62.2, SPECIFY DUCT SIZE AND LENGTH OR INCLUDE DEFAULT TABLE 7.1 (CED 150(O).
38. WATER HEATERS REQUIRE STRAPPING PER DSA GUIDELINES (510.5 CPC, SMMC 8.08.200).
39. AN AUTOMATIC EARTHQUAKE SHUTOFF VALVE IS REQUIRED (SMMC 8.32.070).
40. PROVIDE PROTECTION OF ADJOINING PROPERTY WHEN EXCAVATION IS TO A GREATER DEPTH THAN THE WALLS OR FOUNDATION OF AN ADJACENT BUILDING OR STRUCTURE AND THE ADJACENT BUILDING OR STRUCTURE IS LOCATED CLOSER TO THE PROPERTY LINE THAN THE DEPTH OF THE EXCAVATION. SUBMIT TO B&S (PRIOR TO ISSUANCE OF PERMIT) EVIDENCE OF ADJOINING PROPERTY OWNER(S) WRITTEN NOTIFICATION AND PROVIDE PLANS FOR TEMPORARY SHORING. (CBC 3307)
41. ENSURE PROTECTION AND COVERING OF DUCT OPENINGS DURING STORAGE AND CONSTRUCTION (4.504.1 CGBSC)

SECURITY NOTES

NOTE: EXTERIOR BUILDING OPENINGS ARE TO CONFORM TO SMMC 8.48 SECURITY PROVISIONS.

1: ALL ENTRY DOORS TO DWELLING UNITS OR GUEST ROOMS SHALL BE ARRANGED SO THAT THE OCCUPANT HAS A VIEW OF THE AREA IMMEDIATELY OUTSIDE THE DOOR WITHOUT OPENING THE DOOR. SUCH VIEW MAY BE PROVIDED BY A DOOR VIEWER, THROUGH WINDOWS LOCATED IN THE VICINITY OF THE DOOR, OR THROUGH VIEWPORTS IN THE DOOR OR ADJOINING WALL.

2: SCREENS, BARRICADES OR FENCES MADE OF A MATERIAL WHICH WOULD PRECLUDE HUMAN CLIMBING SHALL BE PROVIDED AT EVERY PORTION OR ROOF, BALCONY OR SIMILAR STRUCTURE WHICH IS WITHIN 8' OF A UTILITY POLE OR SIMILAR STRUCTURE.

3: WOOD FLUSH-TYPE DOORS SHALL BE 1 3/8" MIN. THICKNESS WITH SOLID CORE CONSTRUCTION. (91.6709.1) DOOR STOPS OF IN-SWINGING DOORS SHALL BE ON ONE-PIECE CONSTRUCTION WITH THE JAMB OR JOINED BY RABBET TO THE JAMB. (6709.4)

4: EVERY DOOR IN A SECURITY OPENING FOR AN APARTMENT HOUSE SHALL BE PROVIDED WITH A LIGHT BULB (60 WATT MIN.), AT A MAXIMUM HEIGHT OF 8' ON THE EXTERIOR. (6708)

5: ALL PIN-TYPE DOOR HINGES ACCESSIBLE FROM OUTSIDE SHALL HAVE NON-REMOVABLE HINGE PINS. HINGES SHALL HAVE MIN. 1/4" DIAMETER STEEL JAMB STUD WITH 1/4" MIN. PROTECTION. THE STRIKE PLATE FOR LATCHES AND HOLDING DEVICE FOR PROJECTING DEAD BOLTS IN WOOD CONSTRUCTION SHALL BE SECURED TO THE JAMB AND THE WALL FRAMING WITH SCREWS NO LESS THAN 2 1/2" LONG. (91.6709.5, 6709.7)

6: PROVIDE DEAD BOLTS WITH HARDENED INSERTS, DEADLOCKING LATCH WITH KEY-OPERATED LOCKS ON EXTERIOR. DOORS MUST BE OPERABLE FROM THE INSIDE WITHOUT A KEY, SPECIAL KNOWLEDGE, OR SPECIAL EFFORT (LATCH NOT REQUIRED IN B,F AND S OCCUPANCIES). (6709.2)

7: STRAIGHT DEAD BOLTS SHALL HAVE A MIN. THROW OF 1" AND AN EMBEDMENT OF NOT LESS THAN 5/8", AND A HOOK-SHAPED OR AN EXPANDING-LUG DEADBOLT SHALL HAVE A MINIMUM THROW OF 3/4". (6709.2)

8: THE USE OF A LOCKING SYSTEM WHICH CONSISTS OF A DEADLOCKING LATCH OPERATED BY A DOOR KNOB AND A DEADBOLT OPERATED BY A NON-REMOVABLE THUMB TURN WHICH IS INDEPENDENT OF THE DEADLOCKING LATCH AND WHICH MUST BE SEPARATELY OPERATED, SHALL NOT BE CONSIDERED AS A SYSTEM WHICH REQUIRES SPECIAL KNOWLEDGE OR EFFORT WHEN USED IN DWELLING UNITS. THE DOOR KNOB AND THE THUMB TURN WHICH OPERATES THE DEADBOLT SHALL NOT BE SEPARATED BY MORE THAN 8".

9: WOOD PANEL-TYPE DOORS MUST HAVE PANELS AT LEAST 9/16" THICK WITH SHAPED PORTIONS NOT LESS THAN 1/4" THICK AND INDIVIDUAL PANELS MUST BE NO MORE THAN 300 SQUARE INCHES IN AREA. MULLIONS SHALL BE CONSIDERED A PART OF ADJACENT PANELS EXCEPT MULLIONS NOT OVER 18" LONG MAY HAVE AN OVERALL WIDTH OF NOT LESS THAN 2". STILES AND RAILS SHALL BE OF SOLID LUMBER IN THICKNESS WITH OVERALL DIMENSIONS OF NOT LESS THAN 1 3/8" AND 3" IN WIDTH. (91.6709 ITEM 2)

10: SLIDING DOORS SHALL BE PROVIDED WITH A DEVICE IN THE UPPER CHANNEL OF THE MOVING PANEL TO PROHIBIT RAISING AND REMOVING OF THE MOVING PANEL IN THE CLOSED OR PARTIALLY OPEN POSITION. (6710)

11: SLIDING DOORS SHALL BE EQUIPPED WITH LOCKING DEVICES AND SHALL BE SO CONSTRUCTED AN INSTALLED THAT THEY REMAIN INTACT AND ENGAGED WHEN SUBJECTED TO THE TESTS SPECIFIED IN SECTION 6717.1.

12: METAL OR WOODEN OVERHEAD OR SLIDING DOORS SHALL BE SECURED WITH A CYLINDER LOCK, PADLOCK WITH A MIN. 9/32" DIAMETER HARDENED STEEL SHACKLE AND BOLTED, HARDENED STEEL HASPS, METAL SLIDE BOARD, BOLT OR EQUIVALENT DEVICE UNLESS SECURED ELECTRONICALLY. (6711)

13: PROVIDE METAL GUIDES AT THE TOP AND BOTTOM OF METAL ACCORDION GRATE OR GRILLE-TYPE DOORS AND CYLINDER LOCKS OR PADLOCKS. CYLINDER GUARDS SHALL BE INSTALLED ON ALL CYLINDER LOCKS WHENEVER THE CYLINDER PROJECTS BEYOND THE FACE OF THE DOOR OR IS OTHERWISE ACCESSIBLE TO GRIPPING TOOLS. (6712)

14: IN B,F,M AND S OCCUPANCIES, PANES OF GLAZING WITH AT LEAST ONE DIMENSION GREATER THAN 5" BUT LESS THAN 48" SHALL BE CONSTRUCTED OF TEMPERED OR APPROVED BURGLARY-RESISTANT MATERIAL OR PROTECTED WITH METAL BARS OR GRILLES. (6714)

15: GLAZED OPENINGS WITHIN 40" OF THE DOOR LOCK WHEN THE DOOR IS IN THE CLOSED POSITION SHALL BE FULLY TEMPERED GLASS OR APPROVED BURGLARY-RESISTANT MATERIAL, OR SHALL BE PROTECTED BY METAL BARS, SCREENS OR GRILLS HAVING A MAXIMUM OPENING OF 2". THE PROVISIONS OF THIS SECTION SHALL NOT APPLY TO VIEW PORTS OR WINDOWS WHICH DO NOT EXCEED 2" IN THEIR GREATEST DIMENSIONS. (6713)

16: LOUVERED WINDOWS SHALL BE PROTECTED BY METAL BARS OR GRILLS WITH OPENINGS THAT HAVE AT LEAST ONE DIMENSION OF 6" OR LESS, WHICH ARE CONSTRUCTED TO PRECLUDE HUMAN ENTRY. (6715.3)

17: OTHER OPENABLE WINDOWS SHALL BE PROVIDED WITH SUBSTANTIAL LOCKING DEVICES. IN B, F, M AND S OCCUPANCIES, SUCH DEVICES SHALL BE GLIDE BARS, BOLTS, CROSS-BARS AND / OR PADLOCKS WITH MINIMUM 9/32" HARDENED STEEL SHACKLES AND BOLTED, HARDENED STEEL HASPS. (6715.2)

18: SLIDING WINDOWS SHALL BE PROVIDED WITH A DEVICE IN THE UPPER CHANNEL OF THE MOVING PANEL TO PROHIBIT RAISING AND REMOVING OF THE MOVING PANEL IN THE CLOSED OR PARTIALLY OPEN POSITION. (6715.1)

19: SLIDING WINDOWS SHALL BE EQUIPPED WITH LOCKING DEVICES AND SHALL BE SO CONSTRUCTED AND INSTALLED THAT THEY REMAIN INTACT AND ENGAGED WHEN SUBJECTED TO THE TESTS SPECIFIED IN SECTION 6717.2.

20: ANY RELEASE FOR METAL BARS, GRILLS, GRATES OR SIMILAR DEVICES CONSTRUCTED TO PRECLUDE HUMAN ENTRY THAT ARE INSTALLED SHALL BE LOCATED ON THE INSIDE OF THE ADJACENT ROOM AND AT LEAST 24" FROM THE CLOSEST OPENING THROUGH SUCH METAL BARS, GRILLS, GRATES OR SIMILAR DEVICES THAT EXCEEDS 2" IN ANY DIMENSION. (91.6715.4)

21: ALL OTHER OPENINGS MUST BE PROTECTED BY METAL BARS OR GRILLES WITH OPENINGS OF NOT LESS THAN 6" IN ONE DIMENSION. (91.6716)

HAZARDOUS LOCATIONS FOR GLAZING

THE FOLLOWING SHALL BE CONSIDERED SPECIFIC HAZARDOUS LOCATIONS REQUIRING SAFETY GLAZING MATERIALS (CRC R308.4 & CBC 2406.4):

1: **GLAZING IN DOORS.** GLAZING IN ALL FIXED AND OPERABLE PANELS OF SWINGING, SLIDING AND BIFOLD DOORS SHALL BE CONSIDERED A HAZARDOUS LOCATION. **EXCEPTIONS:** 1. GLAZED OPENINGS OF A SIZE THROUGH WHICH A 3–INCH–DIAMETER SPHERE IS UNABLE TO PASS. 2. DECORATIVE GLAZING.

2: **GLAZING ADJACENT DOORS.** GLAZING IN AN INDIVIDUAL FIXED OR OPERABLE PANEL ADJACENT TO A DOOR WHERE THE NEAREST VERTICAL EDGE OF THE GLAZING IS WITHIN A 24–INCH ARC OF EITHER VERTICAL EDGE OF THE DOOR IN A CLOSED POSITION AND WHERE THE BOTTOM EXPOSED EDGE OF THE GLAZING IS LESS THAN 60 INCHES ABOVE THE FLOOR OR WALKING SURFACE SHALL BE CONSIDERED A HAZARDOUS LOCATION. **EXCEPTIONS:** 1. DECORATIVE GLAZING. 2. WHEN THERE IS AN INTERVENING WALL OR OTHER PERMANENT BARRIER BETWEEN THE DOOR AND THE GLAZING. 3. GLAZING IN WALLS ON THE LATCH SIDE OF AND PERPENDICULAR TO THE PLAN OF THE DOOR IN A CLOSED POSITION. 4. WHERE ACCESS THROUGH THE DOOR IS TO A CLOSET OR STORAGE AREA 3 FEET OR LESS IN DEPTH. GLAZING IN THIS APPLICATION SHALL COMPLY WITH SECTION R308.4.3. 5. GLAZING THAT IS ADJACENT TO THE FIXED PANEL OF PATIO DOORS.

3: **GLAZING IN WINDOWS.** GLAZING IN AN INDIVIDUAL FIXED OR OPERABLE PANEL THAT MEETS ALL OF THE FOLLOWING CONDITIONS SHALL BE CONSIDERED A HAZARDOUS LOCATION:

A. THE EXPOSED AREA OF AN INDIVIDUAL PANE IS LARGER THAN 9 SQUARE FEET.
B. THE BOTTOM EDGE OF THE GLAZING IS LESS THAN 18 INCHES ABOVE THE FLOOR.
C. THE TOP EDGE OF THE GLAZING IS MORE THAN 36 INCHES ABOVE THE FLOOR
D. ONE OR MORE WALKING SURFACES ARE WITHIN 36 INCHES, MEASURED HORIZONTALLY AND IN A STRAIGHT LINE, OF THE GLAZING.

EXCEPTIONS: 1. DECORATIVE GLAZING. 2. WHEN A HORIZONTAL RAIL IS INSTALLED ON THE ACCESSIBLE SIDE(S) OF THE GLAZING 34 TO 38 INCHES ABOVE THE WALKING SURFACE. THE RAIL SHALL BE CAPABLE OF WITHSTANDING A HORIZONTAL LOAD OF 50 POUNDS PER LINEAR FOOT WITHOUT CONTACTING THE GLASS AND BE A MINIMUM OF 1 1/2 INCHES IN CROSS SECTIONAL HEIGHT. 3. OUTBOARD PANES IN INSULATING GLASS UNITS AND OTHER MULTIPLE GLAZED PANELS WHEN THE BOTTOM EDGE OF THE GLASS IS 25 FEET OR MORE ABOVE GRADE, A ROOF, WALKING SURFACES OR OTHER HORIZONTAL SURFACE ADJACENT TO THE GLASS EXTERIOR.

4: **GLAZING IN GUARDS AND RAILINGS.** GLAZING AND GUARDS AND RAILINGS, INCLUDING STRUCTURAL BALUSTER PANELS AND NONSTRUCTURAL IN–FILL PANELS, REGARDLESS OF AREA OR HEIGHT ABOVE A WALKING SURFACE SHALL BE CONSIDERED A HAZARDOUS LOCATION.

5: **GLAZING AND WET SURFACES.** GLAZING IN WALLS, ENCLOSURES OR FENCES CONTAINING OR FACING HOT TUBS, SPAS, WHIRLPOOLS, SAUNAS, STEAM ROOMS BATHTUBS, SHOWERS AND INDOOR OR OUTDOOR SWIMMING POOLS WHERE THE BOTTOM EXPOSED EDGE OF THE GLAZING IS LESS THAN 60 INCHES MEASURED VERTICALLY ABOVE ANY STANDING OR WALKING SURFACE SHALL BE CONSIDERED A HAZARDOUS LOCATION. THIS SHALL APPLY TO SINGLE GLAZING AND ALL PANES IN MULTIPLE GLAZING. **EXCEPTION:** GLAZING THAT IS MORE THAN 60 INCHES, MEASURED HORIZONTALLY AND IN A STRAIGHT LINE, FROM THE WATER'S EDGE OF A BATHTUB, HOT TUB, SPA, WHIRLPOOL, OR SWIMMING POOL.

6: **GLAZING ADJACENT STAIRS AND RAMPS.** GLAZING WHERE THE BOTTOM EXPOSED EDGE OF THE GLAZING IS LESS THAN 36 INCHES ABOVE THE PLANE OF THE ADJACENT WALKING SURFACE OF STAIRWAYS, LANDINGS BETWEEN FLIGHTS OF STAIRS AND RAMPS SHALL BE CONSIDERED A HAZARDOUS LOCATION. **EXCEPTIONS:** 1. WHEN A RAIL IS INSTALLED ON THE ACCESSIBLE SIDE(S) OF THE GLAZING 34 TO 38 INCHES ABOVE THE WALKING SURFACE. THE RAIL SHALL BE CAPABLE OF WITHSTANDING A HORIZONTAL LOAD OF 50 POUNDS PER LINEAR FOOT WITHOUT CONTACTING THE GLASS AND BE A MINIMUM OF 1 1/2 INCHES IN CROSS SECTIONAL HEIGHT. 2. GLAZING 36 INCHES OR MORE MEASURED HORIZONTALLY FROM THE WALKING SURFACE.

7: **GLAZING ADJACENT TO THE BOTTOM STAIR LANDING.** GLAZING ADJACENT TO THE LANDING AT THE BOTTOM OF A STAIRWAY WHERE THE GLAZING IS LESS THAN 36 INCHES ABOVE THE LANDING AND WITHIN 60 INCHES HORIZONTALLY OF THE BOTTOM TREAD SHALL BE CONSIDERED A HAZARDOUS LOCATION. **EXCEPTION:** 1. THE GLAZING IS PROTECTED BY A GUARD COMPLYING WITH SECTION R312 AND THE PLANE OF THE GLASS IS MORE THAN 18 INCHES FROM THE GUARD.

GENERAL NOTES

1. DIMENSIONS INDICATED ARE TO FACE OF FINISHED SURFACE, UNLESS NOTED OTHERWISE.
2. DIMENSIONS AND CONFIGURATION OF EXTERIOR AND INTERIOR WALLS, WINDOWS, DOORS, AND FLOOR ELEVATIONS ARE BASED ON ARCHITECT'S FIELD MEASUREMENTS AND MAY VARY FROM ACTUAL CONSTRUCTION. ALL EXISTING CONDITIONS TO BE FIELD VERIFIED BY CONTRACTOR PRIOR TO START OF CONSTRUCTION. ALL FINDINGS TO BE PROVIDED TO ARCHITECT AND OWNER FOR REVIEW PRIOR TO CONSTRUCTION. THE ARCHITECT DOES NOT WARRANTY THAT THE EXISTING CONDITIONS ARE ACCURATE ON THE PLAN AS SHOWN. ANY VARIATIONS FROM THE PLANS AS SHOWN ARE THE SOLE RESPONSIBILITY OF THE CONTRACTOR.
3. LANDING AT A DOOR SHALL HAVE A LENGTH MEASURED IN THE DIRECTION OF TRAVEL OF NO LESS THAN 36".
4. A LANDING SHALL BE PROVIDED AT THE TOP AND BOTTOM OF STAIRWAYS.
5. HEATER SHALL BE CAPABLE OF MAINTAINING A MINIMUM ROOM TEMPERATURE OF 68°F AT A POINT 3 FEET ABOVE THE FLOOR AND 2 FEET FROM EXTERIOR WALLS IN ALL HABITABLE ROOMS AT THE DESIGN TEMPERATURE (R303.9).
6. LOTS SHALL BE GRADED TO DRAIN SURFACE WATER AWAY FROM FOUNDATION WALLS WITH A MINIMUM FALL OF 6 INCHES WITHIN THE FIRST 10 FEET. (R401.3).
7. PROTECTION OF WOOD AND WOOD BASED PRODUCTS FROM DECAY SHALL BE PROVIDED IN THE LOCATIONS SPECIFIED PER SECTION R317.1 BY THE USE OF NATURALLY DURABLE WOOD OR WOOD THAT IS PRESERVATIVE–TREATED IN ACCORDANCE WITH AWPA U1 FOR THE SPECIES, PRODUCT, PRESERVATIVE AND END USE. PRESERVATIVES SHALL BE LISTED IN SECTION 4 OF AWPA U1.
8. FENCES, PLANTERS AND RETAINING WALLS SHALL NOT EXCEED A HEIGHT OF 3.5 FT ABOVE THE NATURAL GROUND LEVEL IN THE REQUIRED FRONT YARD.
9. ALL INTERIOR AND EXTERIOR STAIRWAYS SHALL BE ILLUMINATED (R303.6)
10. BUILDINGS SHALL HAVE APPROVED ADDRESS NUMBERS, BUILDING NUMBERS OR APPROVED BUILDING IDENTIFICATION PLACED IN A POSITION THAT PLAINLY LEGIBLE AND VISIBLE FROM THE STREET OR ROAD FRONTING THE PROPERTY. (R319)
11. ALL WOOD SILLS ON CONCRETE SHALL BE PRESSURE TREATED DOUGLAS FIR.
12. MAINTAIN 8" BETWEEN FINISH GRADE AND SILL.
13. PROVIDE 18" MIN. CLEARANCE FOR WOOD MEMBERS ABOVE GRADE.
14. FLOOR JOISTS SHALL NOT BE NOTCHED OR DAPPED IN ANY WAY UNLESS DETAILED.
15. PROVIDE APPROVED FLASHING AT ALL EXTERIOR OPENINGS.
16. ALL STRUCTURAL FIELD WELDING REQUIRES A SPECIAL INSPECTION.
17. ALL STRUCTURAL SHOP WELDING REQUIRES A SPECIAL INSPECTION UNLESS PERFORMED IN THE SHOP OF A LICENSED FABRICATOR, WHO SHALL SUBMIT A CERTIFICATE OF FABRICATION TO THE BUILDING OFFICIAL BEFORE FRAMING APPROVAL.
18. NATURAL VENTILATION SHALL BE THROUGH WINDOWS, DOORS, LOUVERS OR OTHER APPROVED OPENINGS TO THE OUTDOOR AIR. SUCH OPENINGS SHALL BE PROVIDED WITH READY ACCESS OR SHALL OTHERWISE BE READILY CONTROLLABLE BY THE BUILDING OCCUPANTS. THE MINIMUM OPENABLE AREA TO THE OUTDOORS SHALL BE 4 PERCENT OF THE FLOOR AREA BEING VENTILATED. (CRC 303.1) IN LIEU OF EXTERIOR OPENINGS FOR HABITABLE ROOMS, A MECHANICAL VENTILATING SYSTEM MEETING THE CALIFORNIA MECHANICAL CODE REQUIREMENTS MAY BE PROVIDED. (CRC R303)
19. ADJOINING ROOMS. FOR THE PURPOSE OF DETERMINING LIGHT AND VENTILATION REQUIREMENTS, ANY ROOM SHALL BE CONSIDERED AS A PORTION OF AN ADJOINING ROOM WHEN AT LEAST ONE-HALF OF THE AREA OF THE COMMON WALL IS OPEN AND UNOBSTRUCTED AND PROVIDES AN OPENING OF NOT LESS THAN ONE-TENTH OF THE FLOOR AREA OF THE INTERIOR ROOM BUT NOT LESS THAN 25 SQUARE FEET (2.3 M2). (CRC 303.2)
20. DAMPPROOFING, WHERE REQUIRED, SHALL BE INSTALLED WITH MATERIALS AS REQUIRED IN SECTION R406.1.
21. SKYLIGHTS AND SLOPED GLAZING SHALL COMPLY WITH SECTION R308.6
22. PROVIDE ANTI-GRAFFITI FINISH WITHIN THE FIRST 9 FEET, MEASURED FROM GRADE, AT EXTERIOR WALLS AND DOORS.

1: GENERAL

A: WORK PERFORMED SHALL COMPLY WITH THESE GENERAL NOTES (UNLESS OTHERWISE NOTED ON PLANS), UNIFORM BUILDING CODE - LATEST EDITION ADOPTED BY THE GOVERNING AGENCY, ALL APPLICABLE LOCAL AND STATE CODES, ORDINANCES AND REGULATIONS.

B: THE CONTRACTOR SHALL VISIT THE SITE, EXAMINE THE EXISTING STRUCTURES, AND NOTE ALL CONDITIONS AS TO THE CHARACTER AND EXTENT OF WORK INVOLVED, PRIOR TO SUBMITTING THE BID.

C: BY SUBMITTING A BID, THE BIDDER AGREES AND WARRANTS THAT HE HAS EXAMINED THE DRAWINGS AND FOUND THAT THEY ARE ADEQUATE FOR PROPER COMPLETION OF THE PROJECT.

D: THE CONTRACTOR SHALL PROCURE AND PAY FOR ALL NECESSARY PERMITS OR CERTIFICATES REQUIRED TO COMPLETE THE WORK SPECIFIED. THE CONTRACTOR SHALL MAKE ANY AND ALL REQUIRED NOTIFICATIONS AND COMPLY WITH ALL APPLICABLE FEDERAL, STATE, AND LOCAL ORDINANCES.

E: ALL TRADES SHALL FURNISH ALL LABOR, EQUIPMENT, MATERIALS END PERFORM ALL WORK NECESSARY, INDICATED, REASONABLY INFERRED, OR REQUIRED BY ANY CODE WITH JURISDICTION TO COMPLETE THEIR SCOPE OF WORK FOR A COMPLETE AND PROPERLY FINISHED JOB. COMPLETED PORTIONS OF THE WORK.

F: IT IS DIRECTLY STIPULATED THAT THE CONTRACTOR SHALL REPAIR AND MAKE GOOD ANY DAMAGE TO ADJOINING PROPERTIES OR IMPROVEMENTS CAUSED BY HIS OPERATIONS.

G: THE CONTRACTOR SHALL COORDINATE THE WORK OF ALL TRADES, CORRELATING THE ARCHITECTURAL DRAWINGS WITH ANY AND ALL CIVIL, STRUCTURAL, SOILS, MECHANICAL, SOLAR, ELECTRICAL, PLUMBING, LANDSCAPE, OR INTERIOR DESIGN DOCUMENTS OR DRAWINGS.

H: ON SITE VERIFICATION OF ALL DIMENSIONS AND CONDITIONS SHALL BE THE RESPONSIBILITY OF THE CONTRACTOR (SUBCONTRACTOR). DIMENSIONS TAKE PRECEDENCE, DO NOT SCALE DRAWINGS. SUCH VERIFICATION SHALL BE MADE BEFORE' ORDERING MATERIALS PREFABRICATED ITEMS AND COMMENCING ANY PORTION OF THE WORK.

I: ALL FRAMING CONDITIONS, NOT SPECIFICALLY COVERED IN THE DRAWINGS SHALL BE IN CONFORMANCE WITH THE GENERAL CONSTRUCTION REQUIREMENTS AND CONVENTIONAL CONSTRUCTION PROVISIONS OF THE LATEST U.B.C ALL CONDITIONS NOT SPECIFICALLY SHOWN OR DETAILED SHALL BE 0? THE ANY MATERIALS SUBSTITUTION SHALL BE PERMITTED ONLY UPON THE CONTRACTOR OR SUPPLIER RECEIVING A WRITTEN CONSENT FROM THE ARCHITECT.

J: ALL MATERIAL REMOVED UNDER THIS CONTRACT, WHICH IS NOT TO BE SALVAGED OR REUSED OR TURNED OVER TO THE OWNER, SHALL BECOME THE PROPERTY OF THE CONTRACTOR AND SHALL BE PROMPTLY REMOVED FROM THE SITE.

K: ALL WORK, INCLUSIVE OF LABOR AND MATERIALS, SHALL BE GUARANTEED FOR ONE (1) YEAR FOLLOWING THE DATE OF THE NOTICE-OF-COMPLETIONS OR LONGER IF REQUIRED BY LAW OR SPECIFICATION.

L: CONTRACTOR SHALL VERIFY ALL DIMENSIONS IN THE FIELD AND NOTIFY THE ARCHITECT IMMEDIATELY, IN WRITING, OF ANY DISCREPANCIES.

Silva Design Construction Inc.

TITLE SHEET

Apartments Structure
2100 Scholarship
Irvine, CA 92614

DRAWN BY SSH
CHECKED BY SSH
SSH

REVISIONS

NUMBER	DATE	BY
1	08/05/2025	PCC #1
2		

LICENSED ARCHITECT
SHAHZAD SHEENA HABIBIAN
C-39787
05-31-2025
RENEWAL DATE
STATE OF CALIFORNIA

DATE ISSUED 08-05-25

DATE PRINTED

PROJECT REF. NUMBER

A0.3

SHEET NUMBER

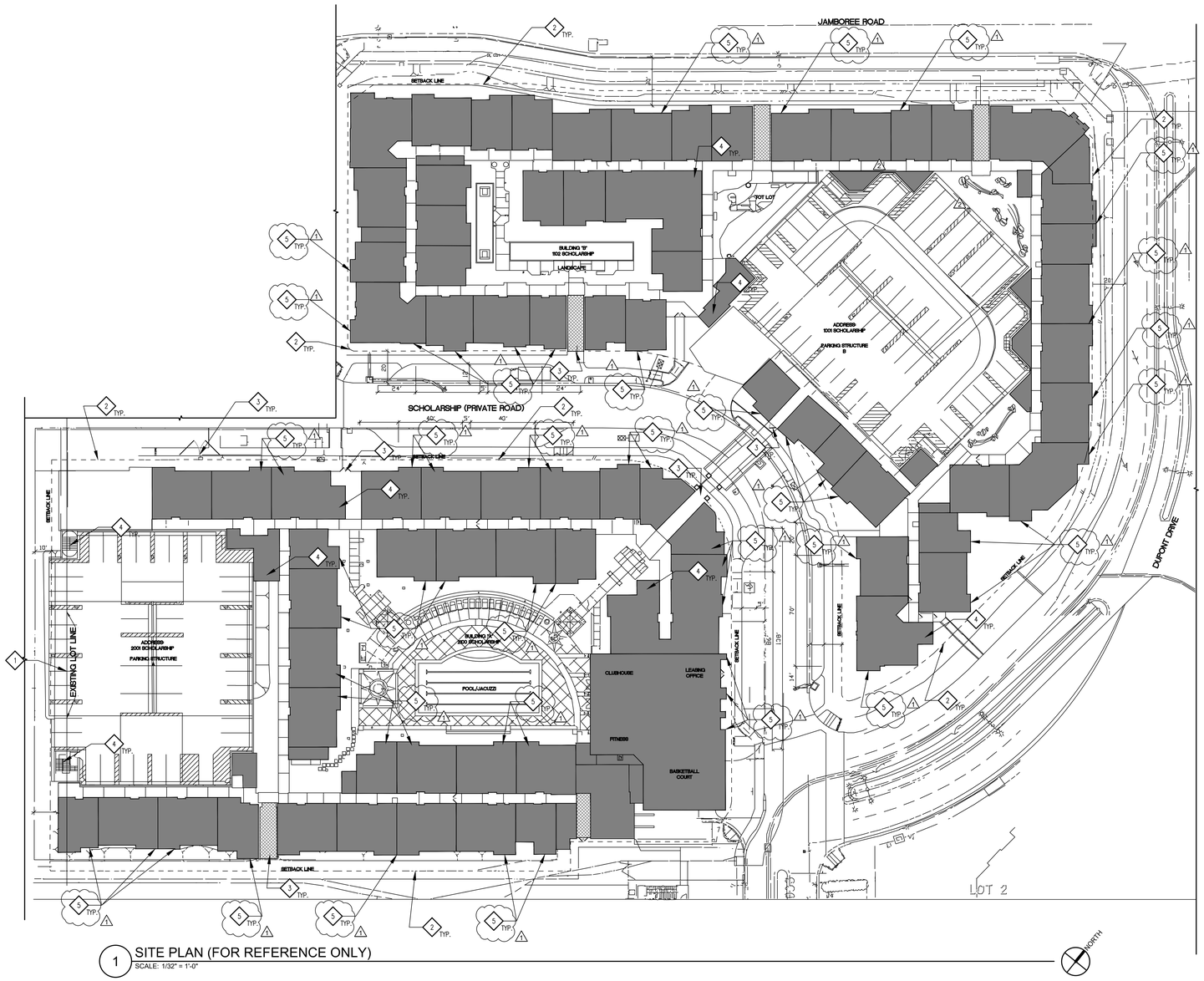

1 SITE PLAN (FOR REFERENCE ONLY)
SCALE: 1/32" = 1'-0"

KEYNOTES

1. PROPERTY LINE
2. SETBACK LINE
3. EXISTING SECURITY GATE, TO REMAIN, NO CHANGES
4. EXISTING STAIR LOCATION, TO REMAIN, NO CHANGES
5. ALL EXISTING TRELLISES ON 4TH FLOOR TO BE REMOVED

SITE NOTES

1. DIMENSIONS INDICATED ARE TO FACE OF FINISHED SURFACE, UNLESS NOTED OTHERWISE.
2. COPIES OF NOTIFICATION TO AQMD SHALL BE PROVIDED TO BUILDING AND SAFETY PRIOR TO THE REMOVAL OF ANY ASBESTOS CONTAINING MATERIAL, PER AQMD RULE 1403
3. PROVIDE SAFEGUARDING DURING CONSTRUCTION SUCH AS PROTECTION ADJOINING PROPERTY AS REQUIRED BELOW AND OTHER ITEMS SUCH AS SITE FENCING AND BARRIERS, SANITATION, ETC.
4. PROVIDE PROTECTION OD ADJOINING PROPERTY WHEN EXCAVATION IS TO GREATER DEPTH THAN THE WALLS OR FOUNDATION OF AN ADJACENT BUILDING OR STRUCTURE AND THE ADJACENT BUILDING OR STRUCTURE IS LOCATED CLOSER TO THE PROPERTY LINE THAN THE DEPTH OF THE EXCAVATION. SUBMIT TO B&S (PRIOR TO ISSUANCE OF PERMIT) EVIDENCE OF ADJOINING PROPERTY OWNER(S) WRITTEN NOTIFICATION AND PROVIDE PLANS FOR TEMPORARY SHORING (3307).
5. NO WORK SHALL BE DONE WITHIN THE PUBLIC RIGHT-OF-WAY WITHOUT PRIOR APPROVAL.
6. OWNER IS RESPONSIBLE FOR REPAIR OF ALL DAMAGE TO OFFSITE IMPROVEMENTS CAUSED BY CONSTRUCTION.
7. PROPOSED IMPROVEMENTS SHALL NOT OBSTRUCT DRAINAGE OR DRAIN INTO NEIGHBORING PRIVATE PROPERTIES.
8. WATER SHALL BE DRAINED AWAY FROM THE FOUNDATION AND SHALL BE MITIGATED FROM PERMEATING INTO FOUNDATION WALL FOOTING OF THE NEW PROPOSED IMPROVEMENTS.
9. NO CONSTRUCTION DEBRIS SHALL BE SPILLED OR STORED ONTO PUBLIC RIGHT-OF-WAY.
10. NO RUNOFF SEDIMENT OR WASTES IS ALLOWED IN WATER LEAVING THE SITE.
11. ALL SITE UTILITIES SHALL BE CONSTRUCTED UNDERGROUND TO THE NEAREST OFFSITE UTILITY POLE. CONTRACTOR / OWNER HAS MADE ARRAGNMENTS WITH THE UTILITY COMPANIES TO PLACE ALL OVERHEAD UTILITIES UNDERGROUND.
12. CONNECTIONS TO THE SEWER OR STORM DRAINS REQUIRE A SEWER PERMIT.
13. ALL LABOR, EQUIPMENT AND MATERIAL REQUIRED FOR THE OFF-SITE IMPROVEMENTS ARE THE RESPONSIBILITY OF THE OWNER.
14. PRIOR TO COMMENCING ANY UNDERGROUND UTILITY WORK, OBTAIN SEPARATE UTILITY EXCAVATION PERMITS AND STREET USE PERMITS FOR UTILITY EXCAVATION.
15. FOR NEW POOLS AN UNGLAZED SOLAR WATER HEATING SYSTEM TO HEAT POOL WATER IS REQUIRED.
16. CONTRACTOR TO VERIFY IN FIELD ALL EXISTING CONDITIONS. REPORT ANY DISCREPANCIES WITH ARCHITECT AND OWNER PRIOR TO ANY CONSTRUCTION.
17. ALL CONCENTRATED DRAINAGE SHALL BE CONDUCTED TO THE STREET AT A 2% MIN. SLOPE
18. CALL UNDERGROUND SERVICE ALERT (DIGALERT – 811) FOR UTILITY NOTIFICATIONS / MARKINGS PRIOR TO REMOVALS AND EXCAVATIONS. REMOVE ALL MARKINGS AFTER CONSTRUCTION IS COMPLETED.
19. THE MAIN SERVICE PANEL SHALL HAVE A MINIMUM BUSBAR RATING OF 200 AMPS
20. SINGLE-FAMILY DWELLINGS SHALL POST THE ADDRESS WITH MINIMUM 4-INCH NUMBERS ON A CONTRASTING BACKGROUND. THE NUMBERS SHALL BE INTERNALLY OR EXTERNALLY ILLUMINATED DURING PERIODS OF DARKNESS. THE NUMBERS SHALL BE VISIBLE FROM THE STREET. WHEN BUILDING SETBACK FROM THE PUBLIC ROADWAY EXCEEDS 100 FEET, ADDITIONAL 4-INCH NUMBERS SHALL BE DISPLAYED AT THE PROPERTY ENTRY. (R319)
21. UNDER SLAB GAS PIPING SHALL BE VENTED IN ACCORDANCE WITH CPC 1210.1.5
22. PROVIDE GAS SHUTOFF VALVES AS PER CPC 1210.9

LEGEND

EXISTING STRUCTURES

Silva Design Construction Inc.

Apartments Structure
2100 Scholarship
Irvine, CA 92614

SITE PLAN

DRAWN BY

CHECKED BY

REVISIONS

NUMBER	DATE	BY
1	08/05/2025	PCC #1
2		
3		

LICENSED ARCHITECT
36787
05-31-2025
RENEWAL DATE
STATE OF CALIFORNIA

DATE ISSUED 08-05-25

DATE PRINTED

PROJECT REF. NUMBER

A1.0

SHEET NUMBER

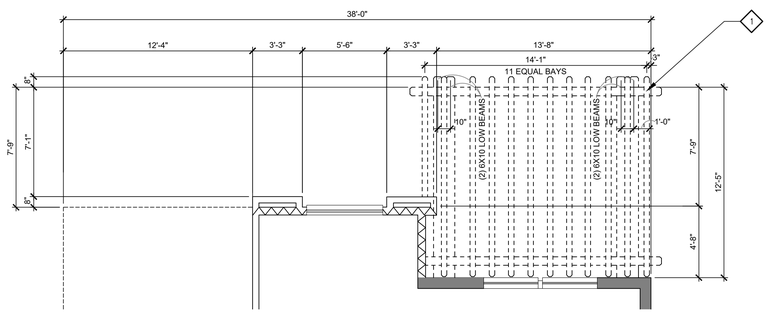

TYPICAL TRELLIS LAYOUT

Scale 1/4" = 1'-0"

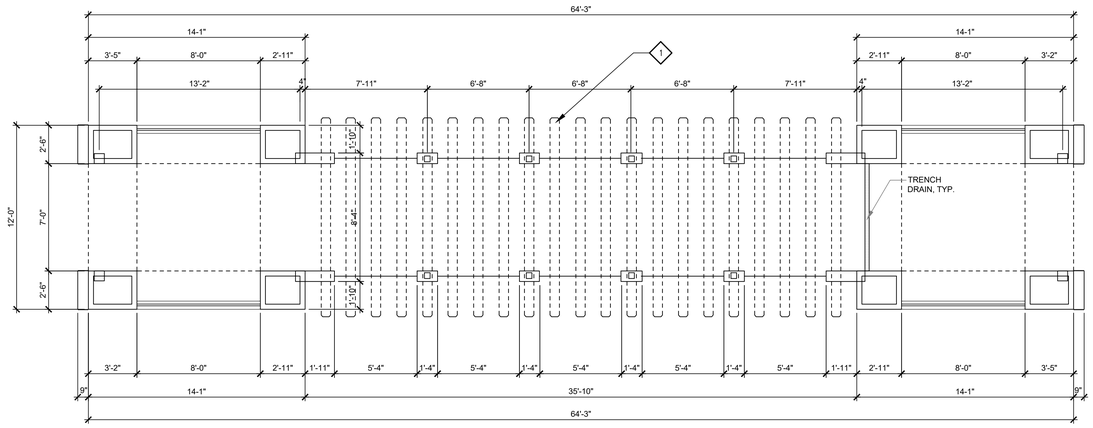

TYPICAL TRELLIS LAYOUT #2

Scale 1/4" = 1'-0"

KEYNOTES

1. REMOVE 6X10 LOW BEAM TRELLIS IN THEIR ENTIRETY, DETACH ALL STRUCTURAL AND HARDWARE CONNECTIONS TO AVOID DAMAGE TO SURROUNDING FINISHES. PATCH AND REPAIR ALL AFFECTED SURFACES TO MATCH ADJACENT MATERIALS, TEXTURE, AND COLOR, PER GC
2.
3.
4.

SITE NOTES

1. DIMENSIONS INDICATED ARE TO FACE OF FINISHED SURFACE, UNLESS NOTED OTHERWISE.
2. COPIES OF NOTIFICATION TO AQMD SHALL BE PROVIDED TO BUILDING AND SAFETY PRIOR TO THE REMOVAL OF ANY ASBESTOS CONTAINING MATERIAL, PER AQMD RULE 1403
3. PROVIDE SAFEGUARDING DURING CONSTRUCTION SUCH AS PROTECTION ADJOINING PROPERTY AS REQUIRED BELOW AND OTHER ITEMS SUCH AS SITE FENCING AND BARRIERS, SANITATION, ETC.
4. PROVIDE PROTECTION OD ADJOINING PROPERTY WHEN EXCAVATION IS TO GREATER DEPTH THAN THE WALLS OR FOUNDATION OF AN ADJACENT BUILDING OR STRUCTURE AND THE ADJACENT BUILDING OR STRUCTURE IS LOCATED CLOSER TO THE PROPERTY LINE THAN THE DEPTH OF THE EXCAVATION. SUBMIT TO B&S (PRIOR TO ISSUANCE OF PERMIT) EVIDENCE OF ADJOINING PROPERTY OWNER(S) WRITTEN NOTIFICATION AND PROVIDE PLANS FOR TEMPORARY SHORING (3307).
5. NO WORK SHALL BE DONE WITHIN THE PUBLIC RIGHT-OF-WAY WITHOUT PRIOR APPROVAL.
6. OWNER IS RESPONSIBLE FOR REPAIR OF ALL DAMAGE TO OFFSITE IMPROVEMENTS CAUSED BY CONSTRUCTION.
7. PROPOSED IMPROVEMENTS SHALL NOT OBSTRUCT DRAINAGE OR DRAIN INTO NEIGHBORING PRIVATE PROPERTIES.
8. WATER SHALL BE DRAINED AWAY FROM THE FOUNDATION AND SHALL BE MITIGATED FROM PERMEATING INTO FOUNDATION WALL FOOTING OF THE NEW PROPOSED IMPROVEMENTS.
9. NO CONSTRUCTION DEBRIS SHALL BE SPILLED OR STORED ONTO PUBLIC RIGHT-OF-WAY.
10. NO RUNOFF SEDIMENT OR WASTES IS ALLOWED IN WATER LEAVING THE SITE.
11. ALL SITE UTILITIES SHALL BE CONSTRUCTED UNDERGROUND TO THE NEAREST OFFSITE UTILITY POLE. CONTRACTOR / OWNER HAS MADE ARRAGNMENTS WITH THE UTILITY COMPANIES TO PLACE ALL OVERHEAD UTILITIES UNDERGROUND.
12. CONNECTIONS TO THE SEWER OR STORM DRAINS REQUIRE A SEWER PERMIT.
13. ALL LABOR, EQUIPMENT AND MATERIAL REQUIRED FOR THE OFF-SITE IMPROVEMENTS ARE THE RESPONSIBILITY OF THE OWNER.
14. PRIOR TO COMMENCING ANY UNDERGROUND UTILITY WORK, OBTAIN SEPARATE UTILITY EXCAVATION PERMITS AND STREET USE PERMITS FOR UTILITY EXCAVATION.
15. FOR NEW POOLS AN UNGLAZED SOLAR WATER HEATING SYSTEM TO HEAT POOL WATER IS REQUIRED.
16. CONTRACTOR TO VERIFY IN FIELD ALL EXISTING CONDITIONS. REPORT ANY DISCREPANCIES WITH ARCHITECT AND OWNER PRIOR TO ANY CONSTRUCTION.
17. ALL CONCENTRATED DRAINAGE SHALL BE CONDUCTED TO THE STREET AT A 2% MIN. SLOPE
18. CALL UNDERGROUND SERVICE ALERT (DIGALERT – 811) FOR UTILITY NOTIFICATIONS / MARKINGS PRIOR TO REMOVALS AND EXCAVATIONS. REMOVE ALL MARKINGS AFTER CONSTRUCTION IS COMPLETED.
19. THE MAIN SERVICE PANEL SHALL HAVE A MINIMUM BUSBAR RATING OF 200 AMPS
20. SINGLE-FAMILY DWELLINGS SHALL POST THE ADDRESS WITH MINIMUM 4-INCH NUMBERS ON A CONTRASTING BACKGROUND. THE NUMBERS SHALL BE INTERNALLY OR EXTERNALLY ILLUMINATED DURING PERIODS OF DARKNESS. THE NUMBERS SHALL BE VISIBLE FROM THE STREET. WHEN BUILDING SETBACK FROM THE PUBLIC ROADWAY EXCEEDS 100 FEET, ADDITIONAL 4-INCH NUMBERS SHALL BE DISPLAYED AT THE PROPERTY ENTRY. (R319)
21. UNDER SLAB GAS PIPING SHALL BE VENTED IN ACCORDANCE WITH CPC 1210.1.5
22. PROVIDE GAS SHUTOFF VALVES AS PER CPC 1210.9

LEGEND

- EXISTING WALL TO REMAIN
- EXISTING WALL TO REMAIN
- EXISTING TRELLIS TO DEMOLISH

Silva Design Construction Inc.

TYPICAL TRELLIS PLAN

Apartments Structure
2100 Scholarship
Irvine, CA 92614

DRAWN BY SSH

CHECKED BY SSH

SSH

REVISIONS

NUMBER	DATE	BY
1	08/05/2025	PCC #1
2		
3		

LICENSED ARCHITECT
C-39787
05-31-2025
RENEWAL DATE
STATE OF CALIFORNIA

DATE ISSUED 08-05-25

DATE PRINTED

PROJECT REF. NUMBER

A2.0

SHEET NUMBER

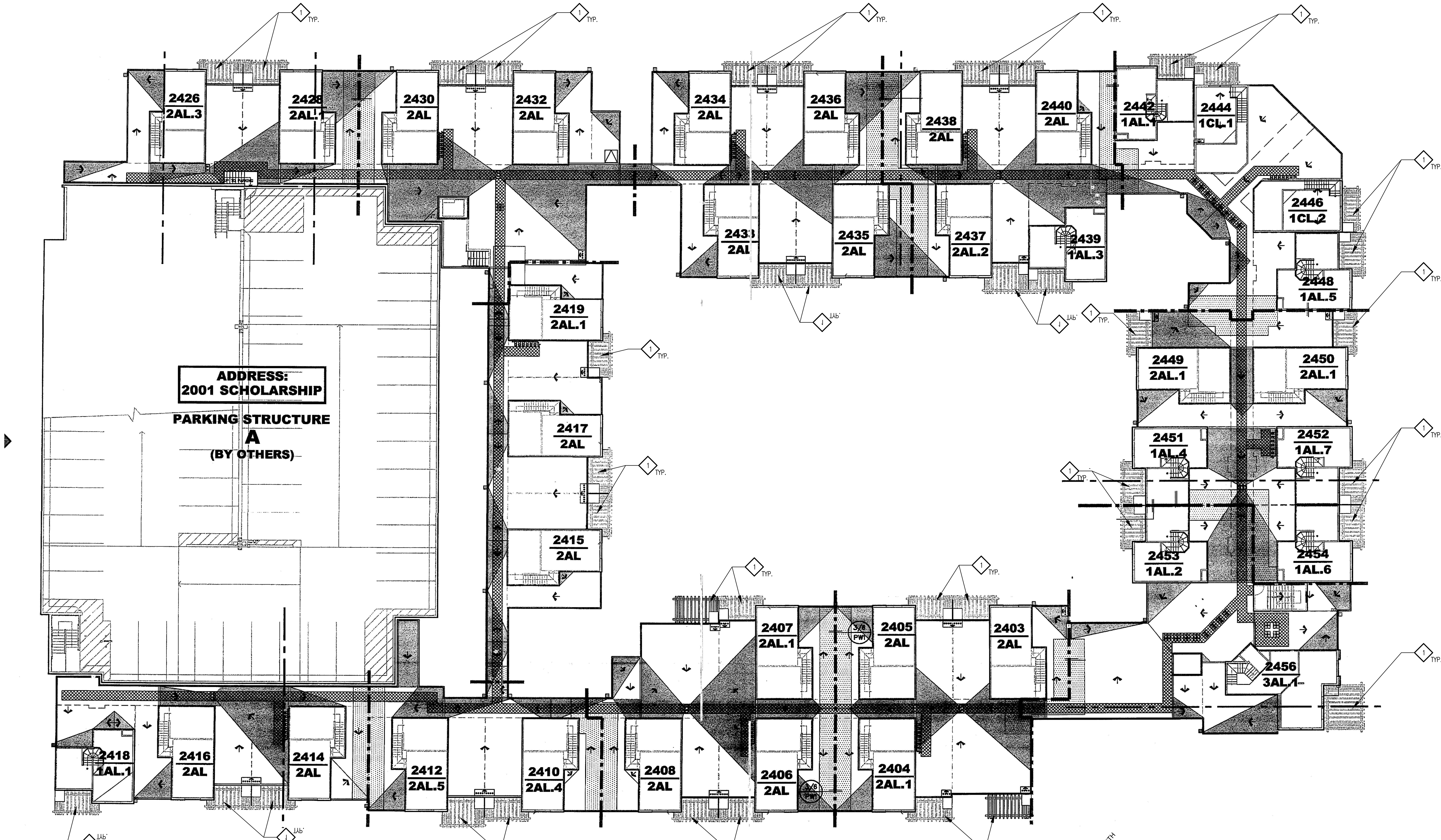

1 LOWER ROOF PLAN (FOR REFERENCE ONLY)
SCALE: 1/32" = 1'-0"

KEYNOTES

1. REMOVE 6X10 LOW BEAM TRELLIS IN THEIR ENTIRETY, DETACH ALL STRUCTURAL AND HARDWARE CONNECTIONS TO AVOID DAMAGE TO SURROUNDING FINISHES. PATCH AND REPAIR ALL AFFECTED SURFACES TO MATCH ADJACENT MATERIALS, TEXTURE, AND COLOR, PER GC
2.
3.
4.

SITE NOTES

1. DIMENSIONS INDICATED ARE TO FACE OF FINISHED SURFACE, UNLESS NOTED OTHERWISE.
2. COPIES OF NOTIFICATION TO AQMD SHALL BE PROVIDED TO BUILDING AND SAFETY PRIOR TO THE REMOVAL OF ANY ASBESTOS CONTAINING MATERIAL, PER AQMD RULE 1403
3. PROVIDE SAFEGUARDING DURING CONSTRUCTION SUCH AS PROTECTION ADJOINING PROPERTY AS REQUIRED BELOW AND OTHER ITEMS SUCH AS SITE FENCING AND BARRIERS, SANITATION, ETC.
4. PROVIDE PROTECTION OD ADJOINING PROPERTY WHEN EXCAVATION IS TO GREATER DEPTH THAN THE WALLS OR FOUNDATION OF AN ADJACENT BUILDING OR STRUCTURE AND THE ADJACENT BUILDING OR STRUCTURE IS LOCATED CLOSER TO THE PROPERTY LINE THAN THE DEPTH OF THE EXCAVATION. SUBMIT TO B&S (PRIOR TO ISSUANCE OF PERMIT) EVIDENCE OF ADJOINING PROPERTY OWNER(S) WRITTEN NOTIFICATION AND PROVIDE PLANS FOR TEMPORARY SHORING (3307).
5. NO WORK SHALL BE DONE WITHIN THE PUBLIC RIGHT-OF-WAY WITHOUT PRIOR APPROVAL.
6. OWNER IS RESPONSIBLE FOR REPAIR OF ALL DAMAGE TO OFFSITE IMPROVEMENTS CAUSED BY CONSTRUCTION.
7. PROPOSED IMPROVEMENTS SHALL NOT OBSTRUCT DRAINAGE OR DRAIN INTO NEIGHBORING PRIVATE PROPERTIES.
8. WATER SHALL BE DRAINED AWAY FROM THE FOUNDATION AND SHALL BE MITIGATED FROM PERMEATING INTO FOUNDATION WALL FOOTING OF THE NEW PROPOSED IMPROVEMENTS.
9. NO CONSTRUCTION DEBRIS SHALL BE SPILLED OR STORED ONTO PUBLIC RIGHT-OF-WAY.
10. NO RUNOFF SEDIMENT OR WASTES IS ALLOWED IN WATER LEAVING THE SITE.
11. ALL SITE UTILITIES SHALL BE CONSTRUCTED UNDERGROUND TO THE NEAREST OFFSITE UTILITY POLE. CONTRACTOR / OWNER HAS MADE ARRAIGNMENTS WITH THE UTILITY COMPANIES TO PLACE ALL OVERHEAD UTILITIES UNDERGROUND.
12. CONNECTIONS TO THE SEWER OR STORM DRAINS REQUIRE A SEWER PERMIT.
13. ALL LABOR, EQUIPMENT AND MATERIAL REQUIRED FOR THE OFF-SITE IMPROVEMENTS ARE THE RESPONSIBILITY OF THE OWNER.
14. PRIOR TO COMMENCING ANY UNDERGROUND UTILITY WORK, OBTAIN SEPARATE UTILITY EXCAVATION PERMITS AND STREET USE PERMITS FOR UTILITY EXCAVATION.
15. FOR NEW POOLS AN UNGLAZED SOLAR WATER HEATING SYSTEM TO HEAT POOL WATER IS REQUIRED.
16. CONTRACTOR TO VERIFY IN FIELD ALL EXISTING CONDITIONS. REPORT ANY DISCREPANCIES WITH ARCHITECT AND OWNER PRIOR TO ANY CONSTRUCTION.
17. ALL CONCENTRATED DRAINAGE SHALL BE CONDUCTED TO THE STREET AT A 2% MIN. SLOPE
18. CALL UNDERGROUND SERVICE ALERT (DIGALERT - 811) FOR UTILITY NOTIFICATIONS / MARKINGS PRIOR TO REMOVALS AND EXCAVATIONS. REMOVE ALL MARKINGS AFTER CONSTRUCTION IS COMPLETED.
19. THE MAIN SERVICE PANEL SHALL HAVE A MINIMUM BUSBAR RATING OF 200 AMPS
20. SINGLE-FAMILY DWELLINGS SHALL POST THE ADDRESS WITH MINIMUM 4-INCH NUMBERS ON A CONTRASTING BACKGROUND. THE NUMBERS SHALL BE INTERNALLY OR EXTERNALLY ILLUMINATED DURING PERIODS OF DARKNESS. THE NUMBERS SHALL BE VISIBLE FROM THE STREET. WHEN BUILDING SETBACK FROM THE PUBLIC ROADWAY EXCEEDS 100 FEET, ADDITIONAL 4-INCH NUMBERS SHALL BE DISPLAYED AT THE PROPERTY ENTRY. (R319)
21. UNDER SLAB GAS PIPING SHALL BE VENTED IN ACCORDANCE WITH CPC 1210.1.5
22. PROVIDE GAS SHUTOFF VALVES AS PER CPC 1210.9

KEYMAP

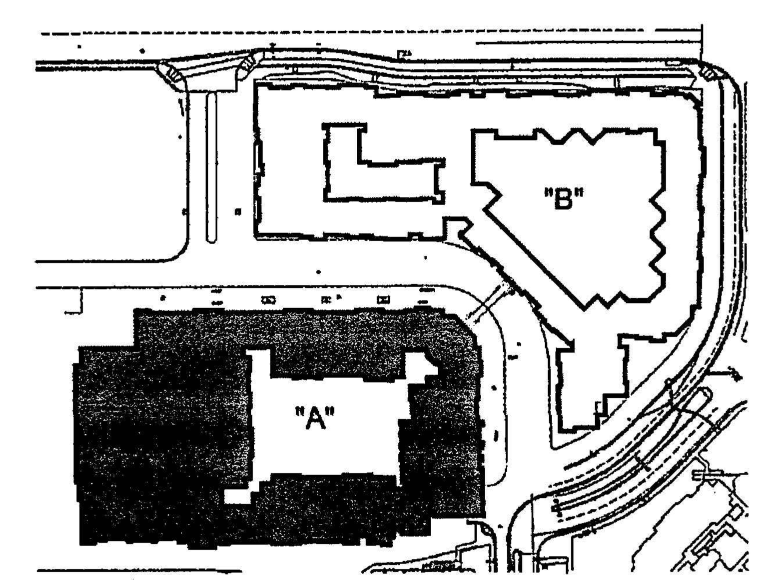

Silva Design Construction Inc.

EXISTING BUILDING
LOWER ROOF PLAN

Apartments Structure
2100 Scholarship
Irvine, CA 92614

DRAWN BY	SSH
CHECKED BY	SSH
	SSH

REVISIONS

NUMBER	DATE	BY
1	08/05/2025	PCC #1
2		

LICENSED ARCHITECT
C-35787
05-31-2025
RENEWAL DATE
STATE OF CALIFORNIA

DATE ISSUED 08-05-25

DATE PRINTED

PROJECT REF. NUMBER

A2.5

SHEET NUMBER

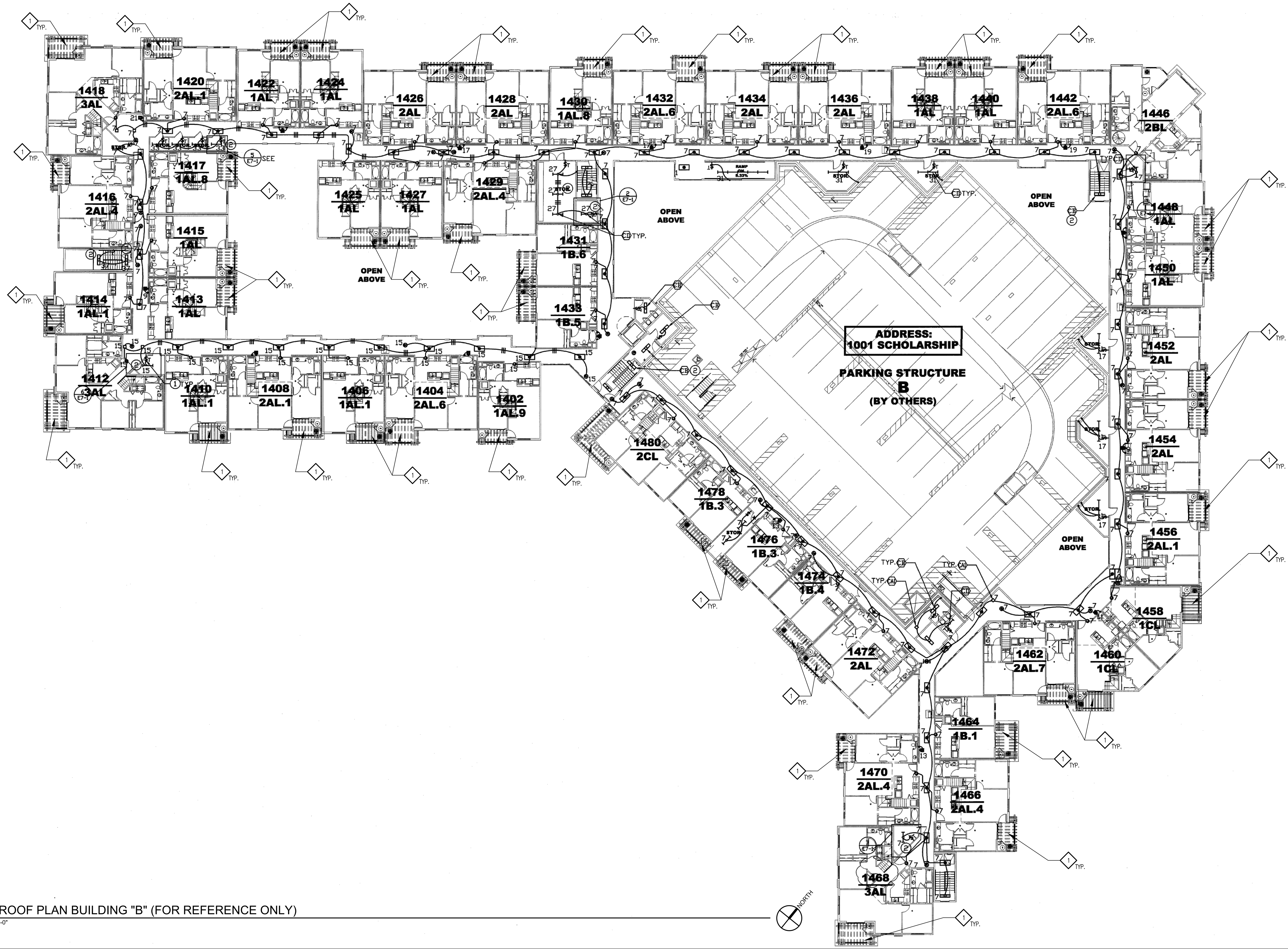

1 LOWER ROOF PLAN BUILDING "B" (FOR REFERENCE ONLY)
SCALE: 1/16" = 1'-0"

KEYNOTES

1. REMOVE 6X10 LOW BEAM TRELLIS IN THEIR ENTIRETY, DETACH ALL STRUCTURAL AND HARDWARE CONNECTIONS TO AVOID DAMAGE TO SURROUNDING FINISHES. PATCH AND REPAIR ALL AFFECTED SURFACES TO MATCH ADJACENT MATERIALS, TEXTURE, AND COLOR, PER GC
2.
3.
4.

SITE NOTES

1. DIMENSIONS INDICATED ARE TO FACE OF FINISHED SURFACE, UNLESS NOTED OTHERWISE.
2. COPIES OF NOTIFICATION TO AQMD SHALL BE PROVIDED TO BUILDING AND SAFETY PRIOR TO THE REMOVAL OF ANY ASBESTOS CONTAINING MATERIAL, PER AQMD RULE 1403
3. PROVIDE SAFEGUARDING DURING CONSTRUCTION SUCH AS PROTECTION ADJOINING PROPERTY AS REQUIRED BELOW AND OTHER ITEMS SUCH AS SITE FENCING AND BARRIERS, SANITATION, ETC.
4. PROVIDE PROTECTION OD ADJOINING PROPERTY WHEN EXCAVATION IS TO GREATER DEPTH THAN THE WALLS OR FOUNDATION OF AN ADJACENT BUILDING OR STRUCTURE AND THE ADJACENT BUILDING OR STRUCTURE IS LOCATED CLOSER TO THE PROPERTY LINE THAN THE DEPTH OF THE EXCAVATION. SUBMIT TO B&S (PRIOR TO ISSUANCE OF PERMIT) EVIDENCE OF ADJOINING PROPERTY OWNER(S) WRITTEN NOTIFICATION AND PROVIDE PLANS FOR TEMPORARY SHORING (3307).
5. NO WORK SHALL BE DONE WITHIN THE PUBLIC RIGHT-OF-WAY WITHOUT PRIOR APPROVAL.
6. OWNER IS RESPONSIBLE FOR REPAIR OF ALL DAMAGE TO OFFSITE IMPROVEMENTS CAUSED BY CONSTRUCTION.
7. PROPOSED IMPROVEMENTS SHALL NOT OBSTRUCT DRAINAGE OR DRAIN INTO NEIGHBORING PRIVATE PROPERTIES.
8. WATER SHALL BE DRAINED AWAY FROM THE FOUNDATION AND SHALL BE MITIGATED FROM PERMEATING INTO FOUNDATION WALL FOOTING OF THE NEW PROPOSED IMPROVEMENTS.
9. NO CONSTRUCTION DEBRIS SHALL BE SPILLED OR STORED ONTO PUBLIC RIGHT-OF-WAY.
10. NO RUNOFF SEDIMENT OR WASTES IS ALLOWED IN WATER LEAVING THE SITE.
11. ALL SITE UTILITIES SHALL BE CONSTRUCTED UNDERGROUND TO THE NEAREST OFFSITE UTILITY POLE. CONTRACTOR / OWNER HAS MADE ARRAIGNMENTS WITH THE UTILITY COMPANIES TO PLACE ALL OVERHEAD UTILITIES UNDERGROUND.
12. CONNECTIONS TO THE SEWER OR STORM DRAINS REQUIRE A SEWER PERMIT.
13. ALL LABOR, EQUIPMENT AND MATERIAL REQUIRED FOR THE OFF-SITE IMPROVEMENTS ARE THE RESPONSIBILITY OF THE OWNER.
14. PRIOR TO COMMENCING ANY UNDERGROUND UTILITY WORK, OBTAIN SEPARATE UTILITY EXCAVATION PERMITS AND STREET USE PERMITS FOR UTILITY EXCAVATION.
15. FOR NEW POOLS AN UNGLAZED SOLAR WATER HEATING SYSTEM TO HEAT POOL WATER IS REQUIRED.
16. CONTRACTOR TO VERIFY IN FIELD ALL EXISTING CONDITIONS. REPORT ANY DISCREPANCIES WITH ARCHITECT AND OWNER PRIOR TO ANY CONSTRUCTION.
17. ALL CONCENTRATED DRAINAGE SHALL BE CONDUCTED TO THE STREET AT A 2% MIN. SLOPE
18. CALL UNDERGROUND SERVICE ALERT (DIGALERT – 811) FOR UTILITY NOTIFICATIONS / MARKINGS PRIOR TO REMOVALS AND EXCAVATIONS. REMOVE ALL MARKINGS AFTER CONSTRUCTION IS COMPLETED.
19. THE MAIN SERVICE PANEL SHALL HAVE A MINIMUM BUSBAR RATING OF 200 AMPS
20. SINGLE-FAMILY DWELLINGS SHALL POST THE ADDRESS WITH MINIMUM 4-INCH NUMBERS ON A CONTRASTING BACKGROUND. THE NUMBERS SHALL BE INTERNALLY OR EXTERNALLY ILLUMINATED DURING PERIODS OF DARKNESS. THE NUMBERS SHALL BE VISIBLE FROM THE STREET. WHEN BUILDING SETBACK FROM THE PUBLIC ROADWAY EXCEEDS 100 FEET, ADDITIONAL 4-INCH NUMBERS SHALL BE DISPLAYED AT THE PROPERTY ENTRY. (R319)
21. UNDER SLAB GAS PIPING SHALL BE VENTED IN ACCORDANCE WITH CPC 1210.1.5
22. PROVIDE GAS SHUTOFF VALVES AS PER CPC 1210.9

KEYMAP

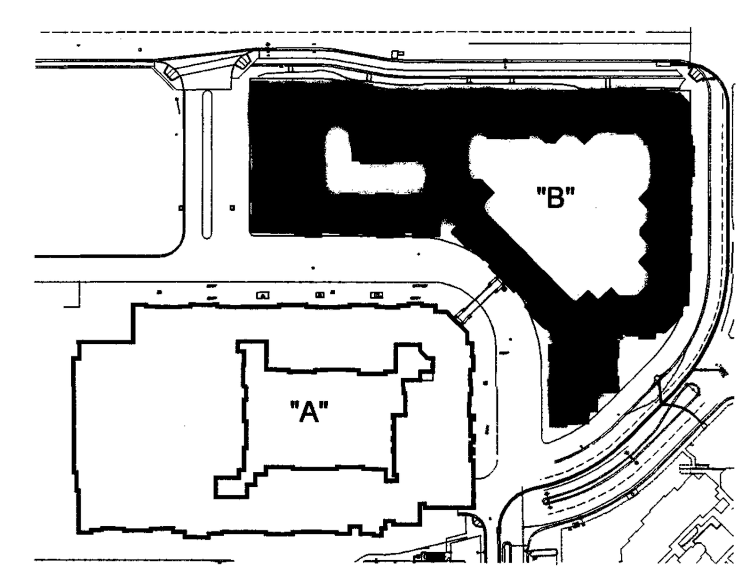

Silva Design Construction Inc.

EXISTING BUILDING
LOWER ROOF PLAN

Apartments Structure
2100 Scholarship
Irvine, CA 92614

DRAWN BY	SSH
CHECKED BY	SSH
	SSH

REVISIONS

NUMBER	DATE	BY
1	08/05/2025	PCC #1
2		

LICENSED ARCHITECT
C-39787
05-31-2025
RENEWAL DATE
STATE OF CALIFORNIA

DATE ISSUED 08-05-25

DATE PRINTED

PROJECT REF. NUMBER

A2.6

SHEET NUMBER

2 Existing Building A/B - West Court Elevation

Scale : 1/8" = 1'-0"

1 Existing Building A/B - East Court Elevation

Scale : 1/8" = 1'-0"

KEYNOTES

1. REMOVE 6X10 LOW BEAM TRELLIS IN THEIR ENTIRETY, DETACH ALL STRUCTURAL AND HARDWARE CONNECTIONS TO AVOID DAMAGE TO SURROUNDING FINISHES. PATCH AND REPAIR ALL AFFECTED SURFACES TO MATCH ADJACENT MATERIALS, TEXTURE, AND COLOR, PER GC
2.
3.
4.

KEYMAP

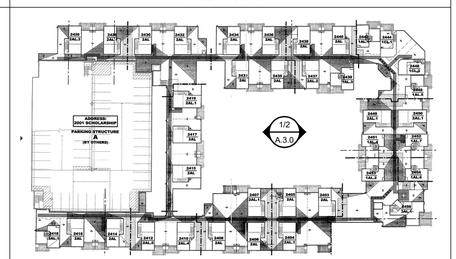

Silva Design Construction Inc.

EXISTING ELEVATIONS

Tiarra & Geovanny Silva
570 E Woodbury Rd
Pasadena, CA 91104

DRAWN BY

CHECKED BY

REVISIONS

NUMBER	DATE	BY
1	08/05/2025	PCC #1
2		

LICENSED ARCHITECT
C-39787
05-31-2025
RENEWAL DATE
STATE OF CALIFORNIA

DATE ISSUED 08-05-25

DATE PRINTED

PROJECT REF. NUMBER

A3.0

SHEET NUMBER

2 PROPOSED Building A/B - West Court Elevation

Scale : 1/4" = 1'-0"

1 PROPOSED Building A/B - East Court Elevation

Scale : 1/4" = 1'-0"

KEYNOTES

1. LOCATION OF REMOVED TRELLIS, FINAL CONDITION TO CONSIST OF CLEAN, UNOBSTRUCTED SURFACES WITH NO NEW CONSTRUCTION OR REPLACEMENT OF ELEMENTS. EXISTING WALL/FASCIA, OR ROOFLINE (AS APPLICABLE) TO BE RESTORED TO A UNIFORM APPEARANCE CONSISTENT WITH THE ORIGINAL DESIGN INTENT. NO NEW SHADING STRUCTURES OR DECORATIVE ELEMENTS ARE PROPOSED
2.
3.
4.

KEYMAP

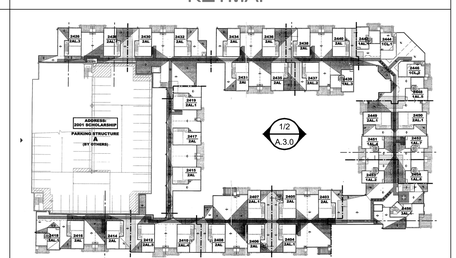

Silva Design Construction Inc.

Tiarra & Geovanny Silva
570 E Woodbury Rd
Pasadena, CA 91104

PROPOSED ELEVATIONS

DRAWN BY

CHECKED BY

REVISIONS

NUMBER	DATE	BY
1	08/05/2025	PCC #1
2		

LICENSED ARCHITECT
C-36787
05-31-2025
RENEWAL DATE
STATE OF CALIFORNIA

DATE ISSUED 08-05-25

DATE PRINTED

PROJECT REF. NUMBER

A3.1

SHEET NUMBER

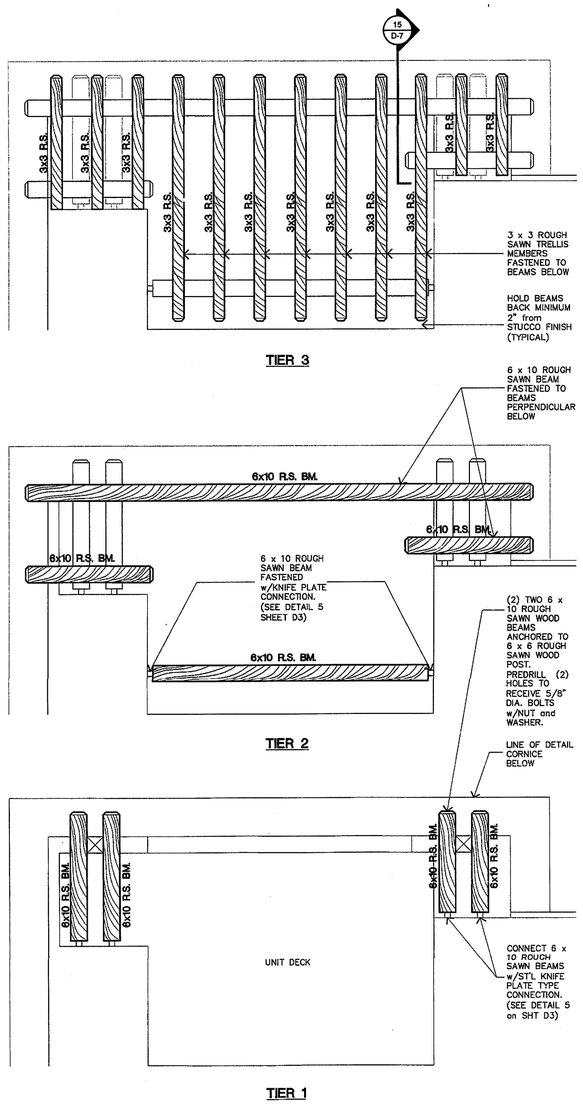

TYPICAL TRELLIS TIER FRAMING SEQUENCE, TYP.
SCALE : 3"=1'-0"

2

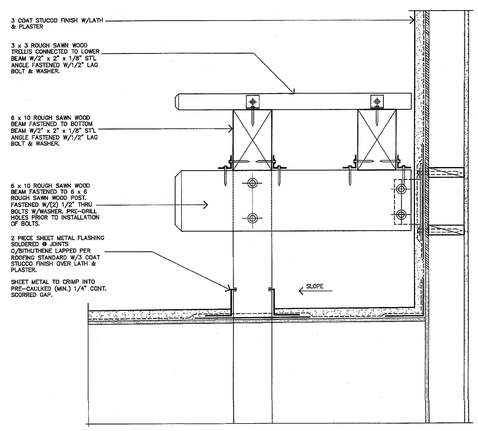

TRELLIS DETAIL SECTION , TYP.
SCALE : NONE

1

Silva Design Construction Inc.

EXISTING TRELLIS DETAILS, FOR REFERENCE

Tiarra & Geovanny Silva
570 E Woodbury Rd
Pasadena, CA 91104

DRAWN BY

CHECKED BY

REVISIONS

NUMBER	DATE	BY
1	08/05/2025	PCC #1
2		
3		

DATE ISSUED 08-05-25

DATE PRINTED

PROJECT REF. NUMBER

A5.1

SHEET NUMBER

NOTICE OF EXEMPTION

TO: ☐ State of California
Office of Planning & Research
PO Box 3044
Sacramento, CA 95812-3044

☒ County Clerk
County of Orange
PO Box 238
Santa Ana, CA 92702

FROM: City of Irvine
Community Development Department
PO Box 19575
Irvine, CA 92623-9575
Attn: Amir S. Rafiq
Consultant Planner
949-724-7439
arafiq@cityofirvine.org

SUBJECT: Filing of **Notice of Exemption** in compliance with Section 15062 of the Public Resources Code.

Project Title and File No.: Minor modification to remove wooden trellises (File No. 00965750-PCPM) from façade of Avenue One Apartments in the Irvine Business Complex.

Project Location: (include County) 2100 Scholarship in the City of Irvine, County of Orange, CA

Project Description: The project is a minor modification to remove wooden trellises from Avenue One Apartments located at 2100 Scholarship in Planning Area 36 (Irvine Business Complex).

Approving Public Agency: City of Irvine
Director of Community Development
PO Box 19575
Irvine, CA 92623-9575

Approval Date: September 22, 2025

Project Applicant: Studio SSH
10021 Tabor St.
Los Angeles, CA 90034
Attn: Sheena Habibian
702-460-8610
sheena@studiossh.com

Exempt Status:
(check one)

- ☐ Ministerial (Section 21080(b)(1); 15268)
- ☐ Declared Emergency (Section 21080(b)(3); 15269(a))
- ☐ Emergency Project (Section 21080(b)(4); 15269(b)(c))
- ☐ Statutory Exemption:
- ☒ Categorical Exemption: Section 15301, Class 1 for Existing Facilities
- ☐ General Rule Exemption (Section 15061(b)(3))

Reason(s) Why Project is Exempt: Project is exempt pursuant to CEQA Guidelines Section 15301 Class 1, Existing Facilities, which allows the operation, repair, maintenance, permitting, leasing, licensing, or minor alterations to existing public or private structures, facilities, mechanical equipment, or topographical features, involving negligible or no expansion of use beyond that existing at the time of the lead agency's determination.

Amir S. Rafiq, Consultant Planner		
Name and Title	**Signature**	**Date**

FORM 45-02 (Rev. 10/2006)

ENCLOSURE 2